SHIMANO®

BAITRUNNER®

BTR-4500B

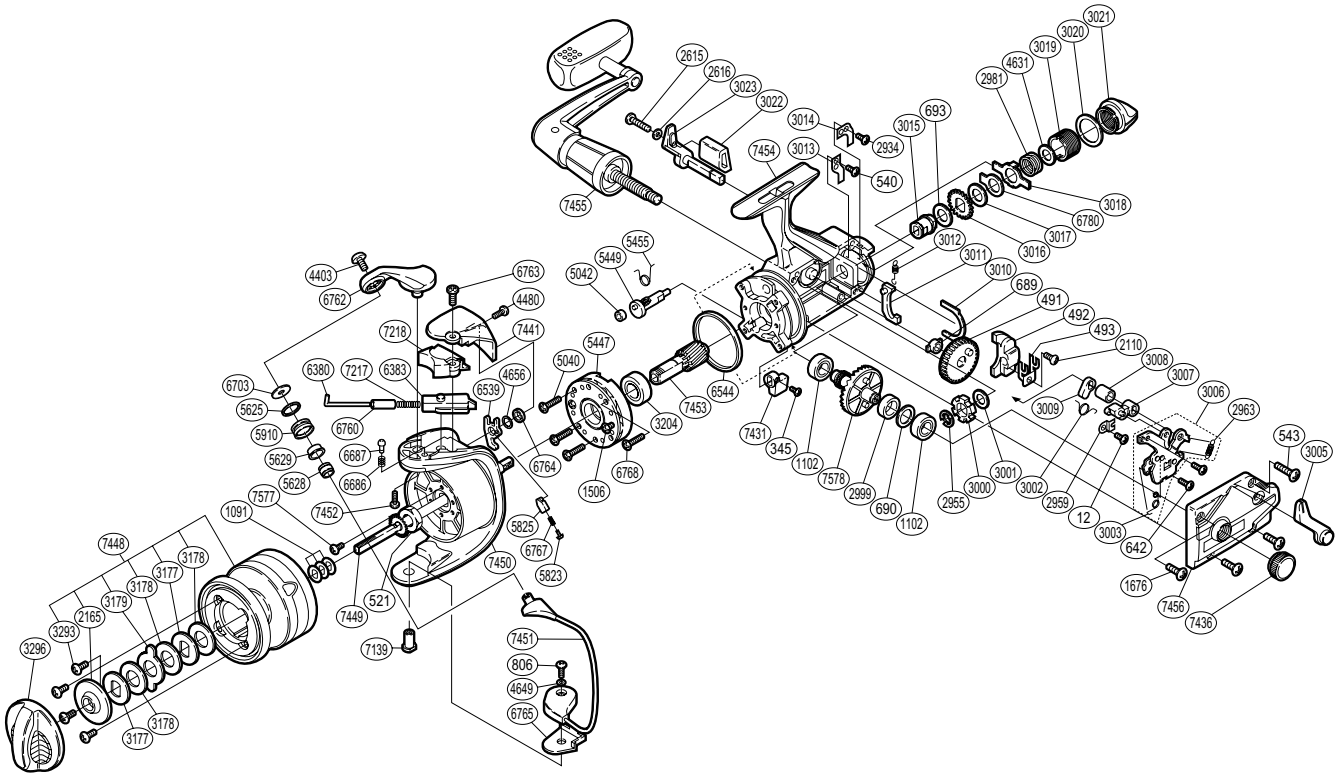

Part No.	Description	Part No.	Description	Part No.	Description
RD 0012	Shaft Retainer Screw	RD 3009	Clutch Cam	RD 5825	Lever Spring Guide (B)
RD 0345	Anti-Reverse Lever Screw	RD 3010	Dial Retainer	RD 5910	Line Roller
RD 0491	Oscillating Gear	RD 3011	BaitRunner Pawl	RD 6380	Bail Spring Guide (A)
RD 0492	Oscillating Slider	RD 3012	BaitRunner Pawl Spring	RD 6383	Bail Spring Guide (B)
RD 0493	Oscillating Slider Retainer	RD 3014	Dial Click	RD 6539	Bail Trip Lever
RD 0521	Rotor Nut	RD 3013	BaitRunner Pawl Guide	RD 6544	Friction Ring
RD 0540	Pawl Guide Screw	RD 3015	Free Spool Tension Shaft	RD 6686	Bail Arm Click Spring
RD 0543	Side Cover Screw (B)	RD 3016	Click Gear	RD 6687	Bail Arm Click
RD 0642	Clutch Plate Screw	RD 3017	Free Spool Tension Washer (B)	RD 6703	Line Roller Washer
RD 0689	Oscillating Gear Bushing	RD 3018	Eared Washer “B FS”	RD 6760	Bail Spring Guide (A) Collar
RD 0690	Drive Gear Washer	RD 3019	Free Spool Tension Screw	RD 6762	Bail Arm
RD 0693	Free Spool Tension Washer (A)	RD 3020	Dial Spacer	RD 6763	Bail Spring Cover Screw (A)
RD 0806	Bail Hold Support Screw	RD 3021	BaitRunner Tension Dial	RD 6764	Spacer
RD 1091	Spool Washer	RD 3022	BaitRunner Lever Bridge	RD 6765	Bail Hold Support Spacer
RD 1102	Ball Bearing	RD 3023	BaitRunner Lever Arm (R)	RD 6767	Bail Trip Lever Spring
RD 1506	Clutch Cover Screw	RD 3177	Drag Washer	RD 6768	Roller Clutch Screw Washer
RD 1676	Side Cover Screw (A)	RD 3178	Key Washer	RD 6780	Single Eared Washer
RD 2110	Slider Retainer Screw	RD 3179	Eared Washer	RD 7139	Bail Hold Support Shaft
RD 2165	Seal Plate	RD 3204	Ball Bearing	RD 7217	Bail Spring
RD 2615	BaitRunner Lever Screw	RD 3293	Seal Plate Screw	RD 7218	Bail Spring Cover
RD 2616	Lock Washer	RD 3296	Drag Knob	RD 7431	Anti-Reverse Lever
RD 2934	Dial Click Screw	RD 4403	Line Roller Screw	RD 7436	Handle Screw Cap
RD 2955	“C” Lock	RD 4480	Bail Spring Cover Screw (B)	RD 7441	Bail Spring Cover Guard
RD 2959	Lever Shaft Retainer	RD 4631	Tension Spring Washer “B”	RD 7448	Spool Assembly
RD 2963	BaitRunner Click Spring	RD 4649	Spacer	RD 7449	Main Shaft
RD 2981	Free Spool Tension Spring	RD 4656	Bail Trip Lever Washer	RD 7450	Rotor
RD 2999	Drive Gear Spacer	RD 5040	Roller Clutch Screw	RD 7451	Bail Assembly
RD 3000	BaitRunner Ratchet	RD 5042	Anti-Reverse Cam Ring	RD 7452	Bail Arm Screw
RD 3001	Ratchet Spacer	RD 5447	Roller Clutch Assembly	RD 7453	Pinion Gear
RD 3002	Clutch Spring	RD 5449	Anti-Reverse Cam	RD 7454	Body Assembly
RD 3003	Clutch Pawl Spring	RD 5455	Anti-Reverse Cam Spring	RD 7455	Handle Assembly
RD 3005	BaitRunner Lever Arm (L)	RD 5625	Line Roller Spacer	RD 7456	Side Cover
RD 3006	Clutch Plate Assembly	RD 5628	Line Roller Collar	RD 7577	Nut Lock Screw
RD 3007	Clutch Arm	RD 5629	Line Roller Bushing	RD 7578	Drive Gear
RD 3008	Clutch Cam Spacer	RD 5823	Lever Spring Guide (A)		

(131004)