Daiwa
COMMITTED TO TOTAL QUALITY

Please order by part number, not key number.

SPINNING REEL REGAL-Z3500BL/4000BL

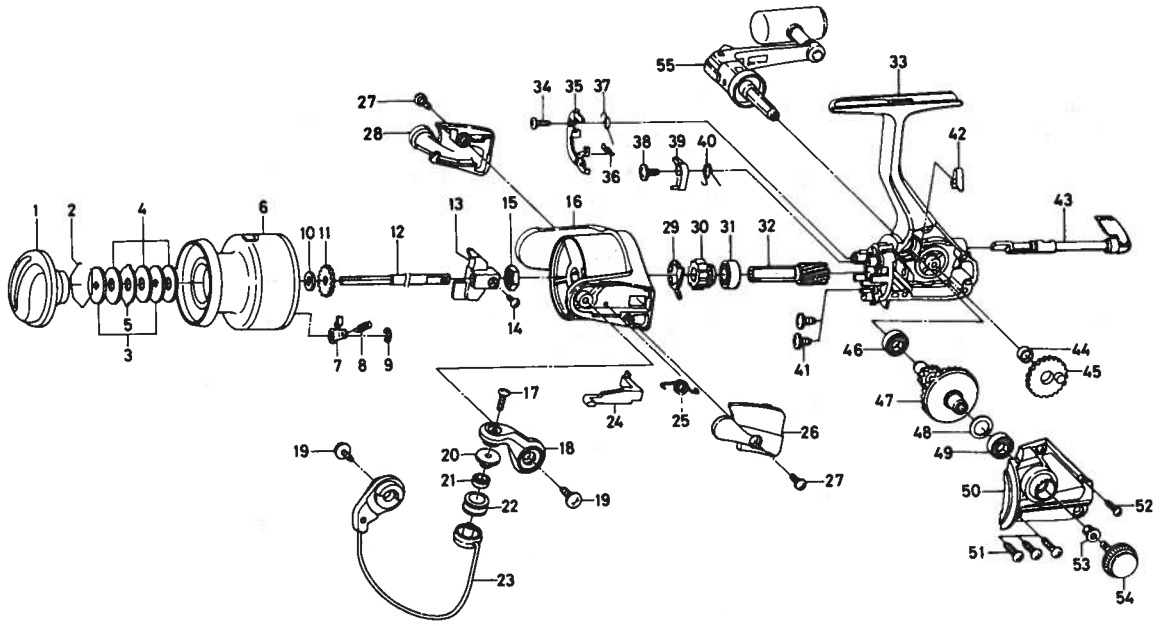

Key NO.	Parts No.	Parts Name
2-9	F33-8303	Spool assembly
1	F28-7003	Drag knob
2	171-7701	Drag washer retainer
3	F09-4901	Key washer
4	E13-6003	Drag washer
5	373-3603	Eared washer
6	F33-8203	Spool assembly
7	B07-5304	Click pawl
8	E40-3101	Click spring
9	320-5901	Click retainer
10	F09-4701	Spool washer
11	E46-2701	Click gear
12	E48-5301	Main shaft
13	F09-1301	Oscillating slider
14	352-1502	Oscillating slider screw
15	340-6602	Rotor nut
16	F32-8803	Rotor
17	B67-9304	Line roller screw
18	F31-0203	Bail arm
19	B84-2102	Bail arm screw
20	F06-6301	Line roller collar
21	F05-5601	Ball bearing A
22	F05-8901	Line roller
23	F33-3301	Bail assembly
24	E46-2101	Bail trip lever
25	F12-8901	Bail spring
26	F31-4303	Bail spring cover
27	E24-8101	Bail spring cover screw
28	F35-2403	Bail trip cover
29	E46-2001	Anti-reverse pawl spring A
30	F31-9701	Anti-reverse ratchet
31	L03-6502	Ball bearing B
32	E52-0101	Pinion gear
33	F37-9501	Body assembly
38	E00-7101	Anti-reverse pawl screw
39	E46-1302	Anti-reverse pawl
40	E46-1201	Anti-reverse pawl spring B
41	E03-7801	Bearing retainer screw
42	E32-7801	Anti-reverse cam spring
43	F08-5125	Anti-reverse lever
44	F13-1601	Oscillating gear collar
45	F24-6601	Oscillating gear
46	631-6901	Ball bearing C
47	E52-0201	Drive gear
48	373-7800	Drive gear washer
49	631-6901	Ball bearing C
50	F37-9801	Side cover
51	B83-5002	Side cover screw A
52	E15-8602	Side cover screw B
53	E12-7501	Handle collar
54	F03-5605	Handle lock screw
55	F33-3401	Handle assembly

Z4000BL Special parts

2-9	F33-8503	Spool assembly
6	F33-8403	Spool assembly
16	F33-4503	Rotor
23	F33-4701	Bail assembly
24	E46-3101	Bail trip lever
33	F37-9502	Body assembly
50	F37-9802	Side cover