PARTS LIST FOR MODEL 4300SS

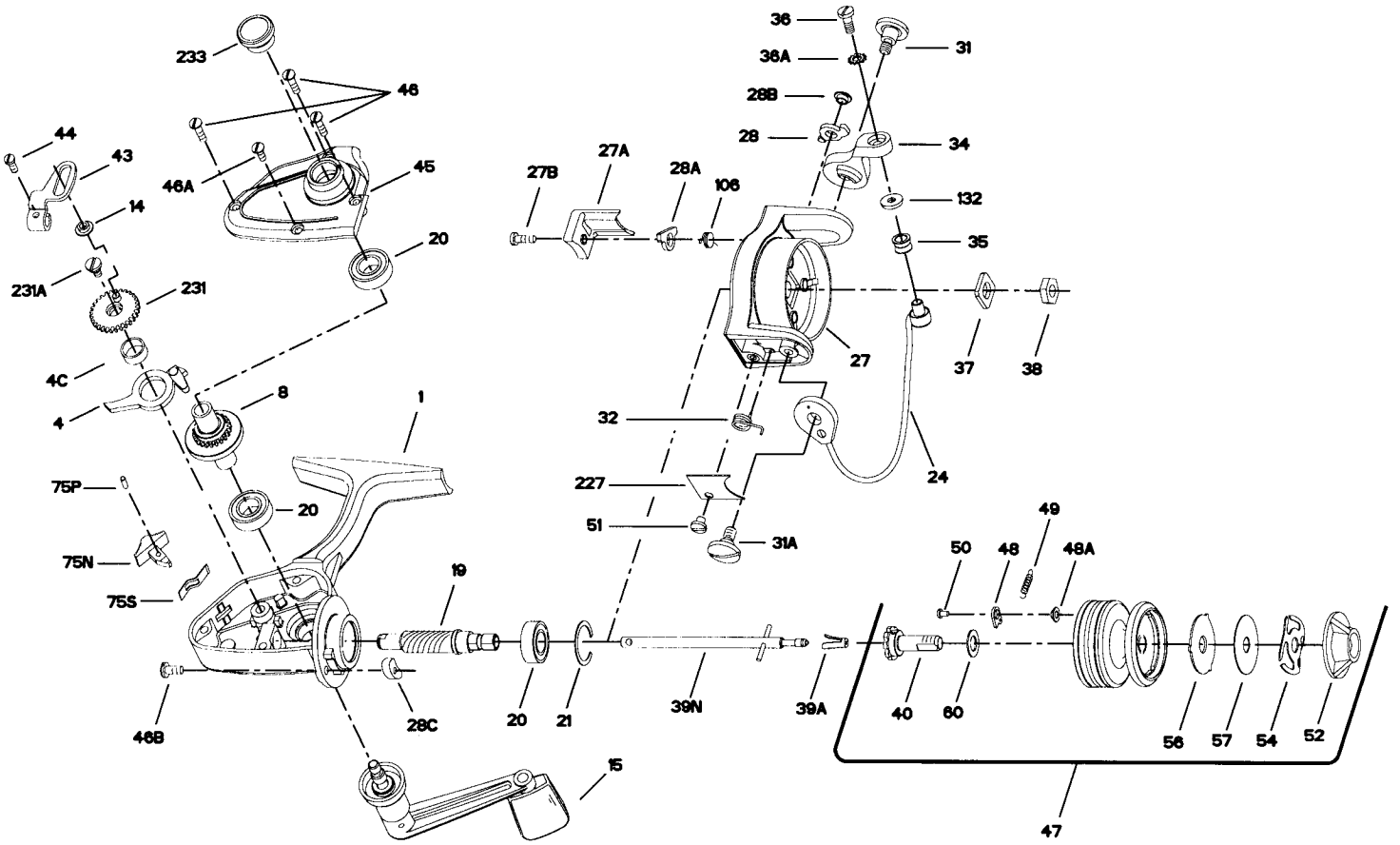

KEY NO.	DESCRIPTION	PART NO.
1	Housing	1-4300
4	Dog	4-4300
4C	Dog Sleeve	4C-4300
8	Main Gear Assembly	8-4300
14	Crosswind Roller	14-4300
15	Handle (Complete)	15-4300
19	Pinion	19-4300
20	Ball Bearing (3 req.)	20-722
21	Bearing Lock Ring	21-722
24	Bail Wire Assembly	24-4300
27	Rotor Cup	27-4300
27A	Bail Trip Cover	27A-4300
27B	Bail Trip Cover Screw	27B-420
28	Trip Lever	28-420
28A	Cam Lever	28A-440
28B	Trip Lever Bushing	28B-440
28C	Trip Cam	28C-420
31	Bail Arm Screw	31-420
31A	Bail Cam Screw	31A-420
32	Bail Spring	32-420
34	Bail Arm	34-420
35	Line Roller	35-420
36	Bail Stud Screw	36-420
36A	Lock Washer	36A-750
37	Rotor Cup Washer	37-420
38	Rotor Cup Nut	38-720
39A	Spool Retainer	39A-4300

KEY NO.	DESCRIPTION	PART NO.
39N	Spool Shaft	39N-4300
40	Spool Sleeve Complete	40-716
43	Crosswind Arm	43-4300
44	Crosswind Arm Screw	46-4300
45	Housing Cam	45-4300
46	Housing Cover Screw (3 req.)	46-4300
46A	Housing Cover Screw Small	46A-4300
46B	Trip Cam Screw	46A-704
47	Spool (Complete)	47-4300
48	Click Tongue	48N-4300
48A	Click Tongue Washer	48A-4300
49	Click Spring	49-4300
50	Click Spring Screw	63A-2.5FR
51	Bail Spring Cover Screw	50-712
52	Drag Knob	52-714
54	Drag Spring	54-716
56	Drag Washer-HT100	56-440
57	Drag Washer Metal	57-716
60	Spool Sleeve Washer	60-716
75N	Anti-Reverse Button	75N-4300
75P	Button Spring Pin	75P-4300
75S	Anti-Reverse Button Spring	75S-4300
106	Cam Lever Spring	106-5500
132	Roller Washer	132-420
227	Bail Spring Cover	227-4300
231	Crosswind Gear	231-4300
231A	Crosswind Gear Screw	231A-4300
233	Bearing Cover	233-4300