PARTS LIST FOR MODEL PURII7000/PURII8000

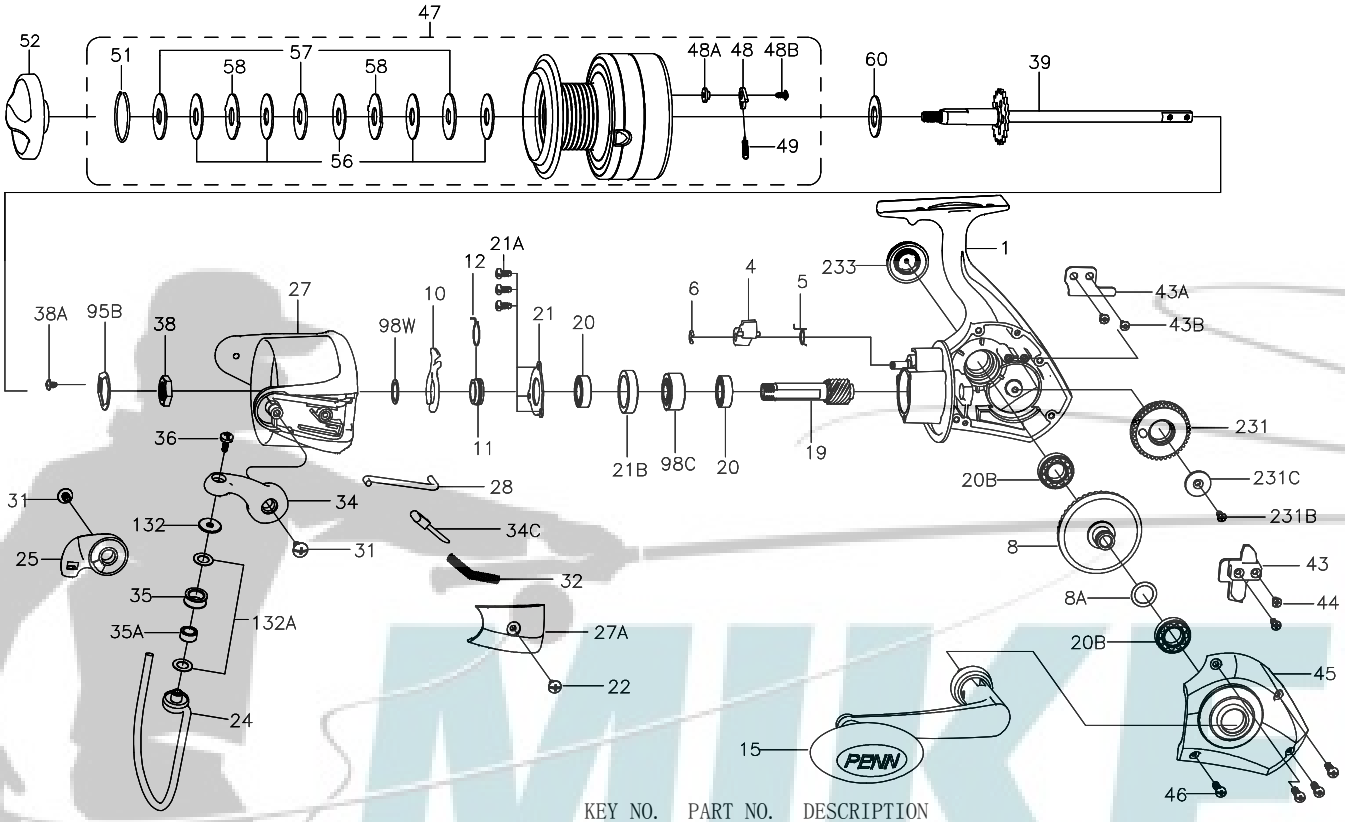

KEY NO.	PART NO.	DESCRIPTION
1	1308167	1-PURII7000 Housing
1	1308168	1-PURII8000 Housing
4	1190939	4-7000SG A/R Dog
5	1190966	5-5000SG Dog Spring
6	1190979	6-5000SG Retaining Clip
8	1204062	8-7000PUR Main Gear
8A	1191031	8A-7000SG Shim
10	1191068	10-7000SG A/R Holder
11	1191087	11-7000SG Bushing
12	1191090	12-5000SG A/R Bushing Spring
15	1308169	15-PURII7000 Handle Assembly
19	1204065	19-7000PUR Pinion Gear
20	1204012	20-5000PUR Ball Bearing (2 req)
20B	1204068	20B-7000PUR Ball Bearing (2 req)
21	1192636	21-5000SG Bearing Retainer
21A	1204016	21A-5000PUR Bearing Retainer Screw (3 req)
21B	1192650	21B-5000SG Collar

KEY NO.	PART NO.	DESCRIPTION
22	1204018	22-6000PUR Bail Pivot Cover Screw
24	1308170	24-PURII7000 Bail Wire
24	1308171	24-PURII8000 Bail Wire
25	1308159	25-PURII6000 Bail Holder
27	1308173	27-PURII7000 Rotor (w/weight & screw)
27	1308174	27-PURII8000 Rotor
27A	1204076	27A-7000PUR Bail Pivot Cover
28	1204077	28-7000PUR Trip Lever
28	1204078	28-8000PUR Trip Lever
31	1204039	31-6000PUR Bail Arm Screw (2 req)
32	1200520	32-6000SG Bail Spring
34	1214201	34-6000FRC Bail Arm
34C	1191656	34C-7000SG Pivot Arm
35	1191674	35-3000SG Line Roller
35A	1203992	35A-3000PUR Line Roller Bushing
36	1203993	36-3000PUR Bail Stud Screw
38	1204084	38-7000PUR Rotor Nut
38A	1203995	38A-3000PUR Rotor Locking Plate Screw
39	1204086	39-7000PUR Main Shaft Assembly
43	1204087	43-7000PUR Crosswind Block
43A	1191821	43A-7000SG Crosswind Block Plate
43B	1203997	43B-3000PUR Crosswind Block Plate Screw (2 req)
44	1191845	44-5000SG Crosswind Block Screw (2 req)
45	1308175	45-PURII7000 Housing Cover
46	1308176	46-PURII5000 Housing Cover Screw (4 req)
47	1308177	47-PURII7000 Spool Assembly
47	1308178	47-PURII8000 Spool Assembly
48	1211625	48-5000SG Click Tongue
48A	1211626	48A-5000SG Click Tongue Washer
48B	1211612	48B-5000SG Spool Click Screw
49	1211627	49-5000SG Click Tongue Spring
51	1287231	51-8000PUR Drag Retaining Ring
52	1308179	52-PURII7000 Drag Knob Assembly
56	1192038	56-7000SG Drag Washer (5 req)
57	1192046	57-7000SG Keyed Washer (3 req)
58	1192055	58-7000SG Earred Washer (2 req)
60	1192062	60-5000SG Thrust Washer
95B	1192186	95B-5000SG Rotor Locking Plate
98C	1192215	98C-5000SG Clutch/Sleeve Assembly
98W	1216770	98W-7000FRC Clutch Washer
132	1192297	132-5000SG Roller Washer
132A	1192302	132A-3000SG Line Roller Washer (2 req)
231	1192507	231-7000SG Crosswind Gear
231B	1204097	231B-7000PUR Screw Crosswind Gear
231C	1204098	231C-7000PUR Screw Crosswind Sleeve
233	1308166	233-PURII5000 Bearing Cover Assembly

MIKE'S REEL REPAIR