PARTS LIST FOR MODEL FRCII4000

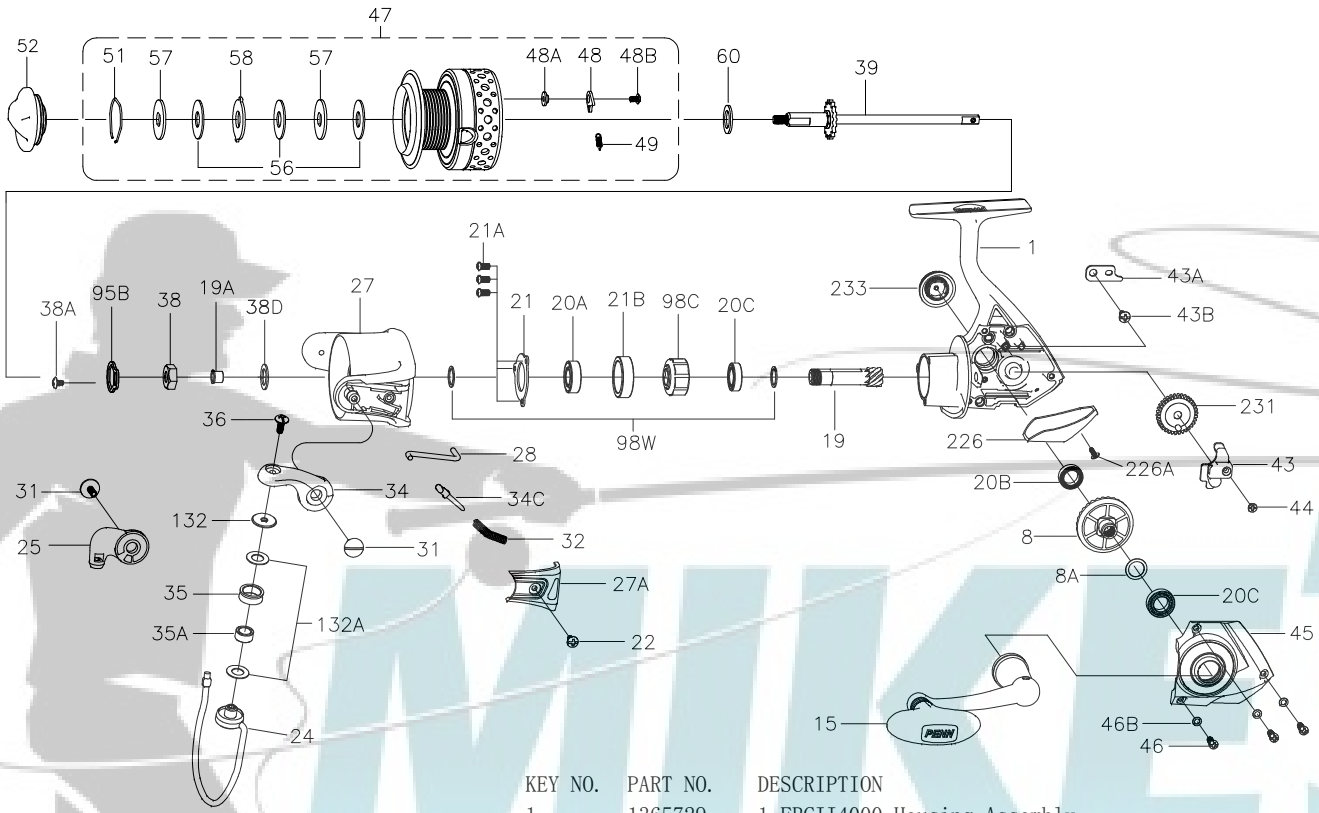

KEY NO.	PART NO.	DESCRIPTION
1	1365729	1-FRCII4000 Housing Assembly
8	1308047	8-CFT3000 Main Gear
8A	1191028	8A-3000SG Shim
15	1365723	15-FRCII4000 Handle Assembly
19	1191231	19-3000SG Pinion Gear
19A	1191252	19A-3000SG Pinion Bushing
20A	1203973	20A-3000PUR Upper Pinion Ball Bearing
20B	1203974	20B-3000PUR Housing Ball Bearing
20C	1203975	20C-3000PUR Ball Bearing (2 req)
21	1308052	21-CFT3000 Bearing Retainer
21A	1192644	21A-3000SG Bearing Retainer Screw (3 req)
21B	1308053	21B-CFT3000 Collar
22	1251743	22-1000FRC Bail Pivot Cover Screw
24	1308055	24-CFT4000 Bail Wire

KEY NO.	PART NO.	DESCRIPTION
25	1308056	25-CFT3000 Bail Holder
27	1365730	27-FRCII4000 Rotor
27A	1308060	27A-CFT4000 Bail Pivot Cover
28	1308062	28-CFT4000 Trip Lever
31	1308063	31-CFT3000 Bail Arm Screw (2 req)
32	1191586	32-3000SG Bail Spring
34	1308064	34-CFT3000 Bail Arm
34C	1308065	34C-CFT3000 Pivot Arm
35	1308066	35-CFT3000 Line Roller
35A	1308067	35A-CFT3000 Line Roller Bushing
36	1191699	36-3000SG Bail Stud Screw
38	1191728	38-3000SG Rotor Nut
38A	1308069	38A-CFT3000 Rotor Locking Plate Screw
38D	1308070	38D-CFT3000 Rotor Nut Washer
39	1365731	39-FRCII4000 Main Shaft Assembly
43	1200531	43-4000SG Crosswind Block
43A	1191818	43A-3000SG Crosswind Block Plate
43B	1191826	43B-3000SG Crosswind Block Plate Screw
44	1191843	44-3000SG Crosswind Block Screw
45	1365732	45-FRCII4000 Housing Cover Assembly
46	1191901	46-3000SG Housing Cover Screw (3 req)
46B	1191907	46B-3000SG Housing Cover Washer (3 req)
47	1365733	47-FRCII4000 Spool Assembly
48	1211604	48-3000SG Click Tongue
48A	1214226	48A-3000SG Click Tongue Washer
48B	1211591	48B-3000BTL Spool Click Screw
49	1211605	49-3000SG Click Tongue Spring
51	1308078	51-CFT3000 Drag Retaining Ring
52	1365728	52-FRCII4000 Drag Knob Assembly
56	1192035	56-3000SG Drag Washer (3 req)
57	1192043	57-3000SG Keyed Washer (2 req)
58	1192052	58-3000SG Eared Washer
60	1192060	60-3000SG Thrust Washer
95B	1308081	95B-CFT3000 Rotor Locking Plate
98C	1308082	98C-CFT3000 Clutch/Sleeve Assembly
98W	1204004	98W-3000PUR Clutch Washer (2 req)
132	1192296	132-3000SG Roller Washer
132A	1192302	132A-3000SG Line Roller Washer (2 req)
226	1308083	226-CFT3000 Rear Cover
226A	1192473	226A-3000SG Rear Cover Screw
231	1200522	231-4000SG Crosswind Gear
233	1211667	233-3000FRC Bearing Cover Assembly

407-FRCII4000 Rev.0 8-19-2014

1364038

MIKE'S REEL REPAIR