PARTS LIST FOR MODEL 115L

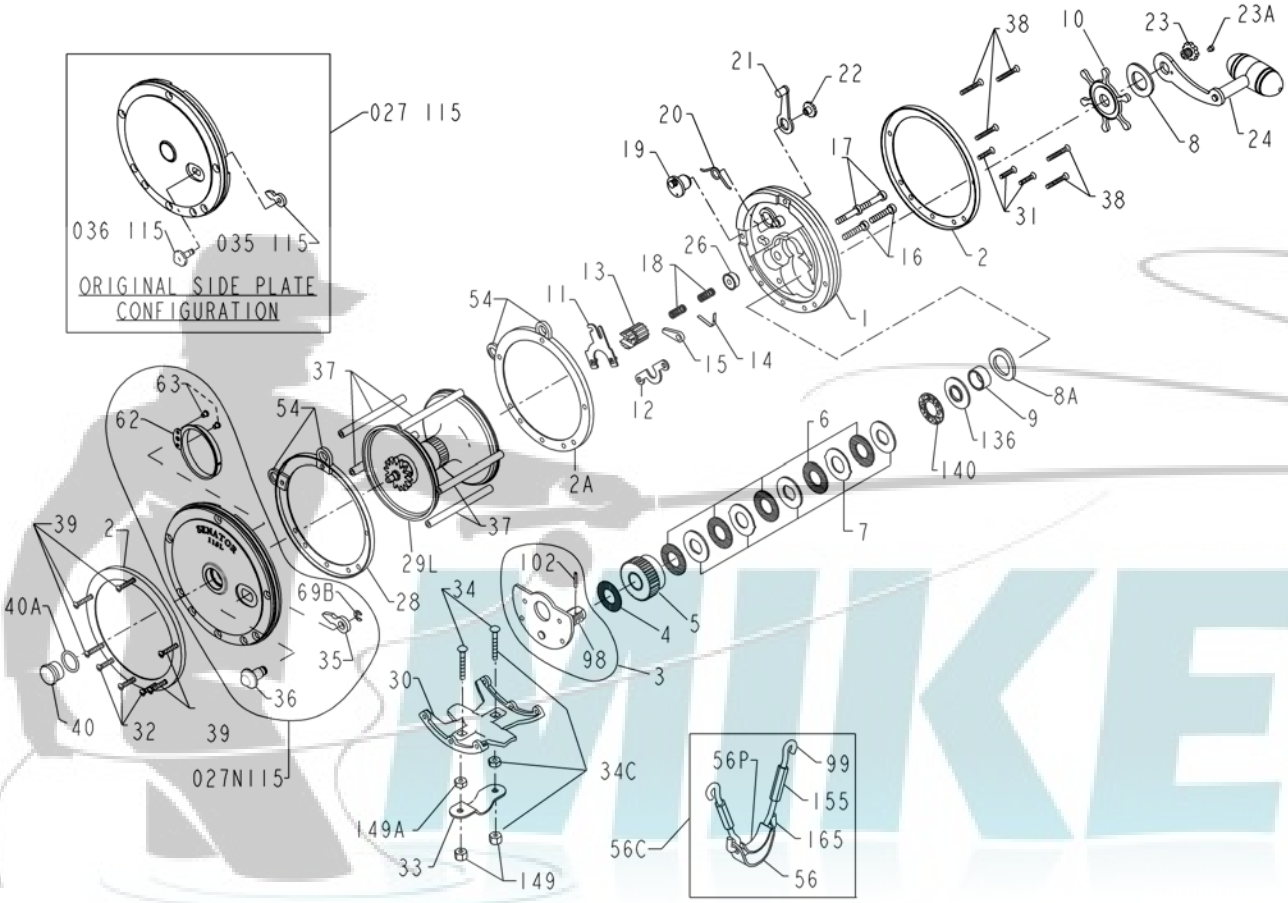

KEY NO.	PART NUMBER 115L ORIGINAL †	115L UPDATED †	DESCRIPTION
1	001 115	001 115	Right Side Plate
2	002 115O (2 req)	002 115O (2 req)	Outer Right Side Ring
2A	002 115i	002 115i	Inner Right Side Ring
3	003 115	003 115	Bridge Assembly
4	004 115	004 115	Fiber Washer
5	005 115	005 115	Main Gear
6	006 115 (5 req)	006 115 (5 req)	Drag Washer
7	007C115	007C115	Metal Drag Washer Set
8	008 114	008 114	Tension Spring
8A	008 115	008 115	Tension Spring

KEY NO.	PART NUMBER 115L ORIGINAL †	115L UPDATED †	DESCRIPTION
9	009N114	009N114	Spacing Sleeve
10	010 114	010 114	Star Drag Wheel
11	011 115	011 115	Eccentric Jack
12	012 114	012 114	Pinion Yoke
13	013 115	013 115	Pinion
14	014 116	014 116	Dog Spring
15	015 115	015 115	Dog
16	016 114 (2 req)	016 114 (2 req)	Lower Bridge Screw
17	017 114 (2 req)	017 114 (2 req)	Upper Bridge Screw
18	018 114 (2 req)	018 114 (2 req)	Clutch Springs
19	019 115	019 115	Eccentric
20	020 114	020 114	Eccentric Spring
21	021 114	021 114	Eccentric Lever
22	023 060	023 060	Eccentric Screw
23	023 116	023 116	Handle Screw
23A	110 060	110 060	Handle Lock Screw
24	024 057	024 057	Handle Assembly
26	026 116	026 116	Right Side Bearing
27	027 115	027N115	Left Side Plate Assembly (Includes Click Components)
28	028 115i	028 115i	Inner Left Side Ring
29L	029L115	029L115	Spool Assembly
30	030 115	030 115	Stand
31	039 012 (3 req)	039 012 (3 req)	Right Side Stand Screw
32	032 021	032 021	Left Side Stand Screw
33	033 340	033 340	Rod Clamp
*	*033R114	*033R114	*Ringed Rod Clamp (Optional)
34	034 045	034 045	Clamp Screw
34C	034C045	034C045	Clamp Screw w/Nuts
35	035 115	035 115	Click Tongue
36	036 115	036 115L	Click Button
37	037 115 (5 req)	037 115 (5 req)	Frame Post
38	039 013 (5 req)	039 013 (5 req)	Right Side Post Screw
39	039 012 (5 req)	039 012 (5 req)	Left Side Post Screw
40	040 114H	040 114HL	Left Side Bearing
40A	N/A	120 114H	Left Side Bearing O-ring
54	054 114 (4 req)	054 114 (4 req)	Harness Lug
56	056 116	056 116	Rod Brace
56C	056C115	056C115	Rod Brace Assembly
56P	056P117	056P117	Rod Brace Pad
62	**062 114	062 114	Click Spring (1 screw mounting)
62	N/A	062 114H2	Click Spring (2 screw mounting)
63	N/A	063 209	Click Spring Screw (1 or 2 req)
69B	N/A	069B4400	Retaining Ring
98	098 114	098 114	Gear Sleeve w/Pin
99	099 115 (2 req)	099 115 (2 req)	Hook Screw L.H. Thread
102	102 114	102 114	Gear Sleeve Pin
136	136 115	136 115	Pressure Plate
140	140 115	140 115	Felt Washer
149	149 200 (2 req)	149 200 (2 req)	Hex Nut
149A	149 045 (2 req)	149 045 (2 req)	Clamp Nut
155	155 115 (2 req)	155 115 (2 req)	Turnbuckle
165	165 115 (2 req)	165 115 (2 req)	Hook Screw R.H. Thread

† = 115L Original reel has "Senator" embossed on the side plates
115L Updated reel has "Senator **115L**" (single screw spring mount) or "Senator **9/0**" (double screw spring mount) embossed on the side plates

* = Not Shown

** = Not sold separately for **Original** 115L