MIKE'S REEL REPAIR
#108 - 31060 Peardonville Road
Abbotsford, B.C., Canada V2T 5K5
Toll Free 1-888-404-1119

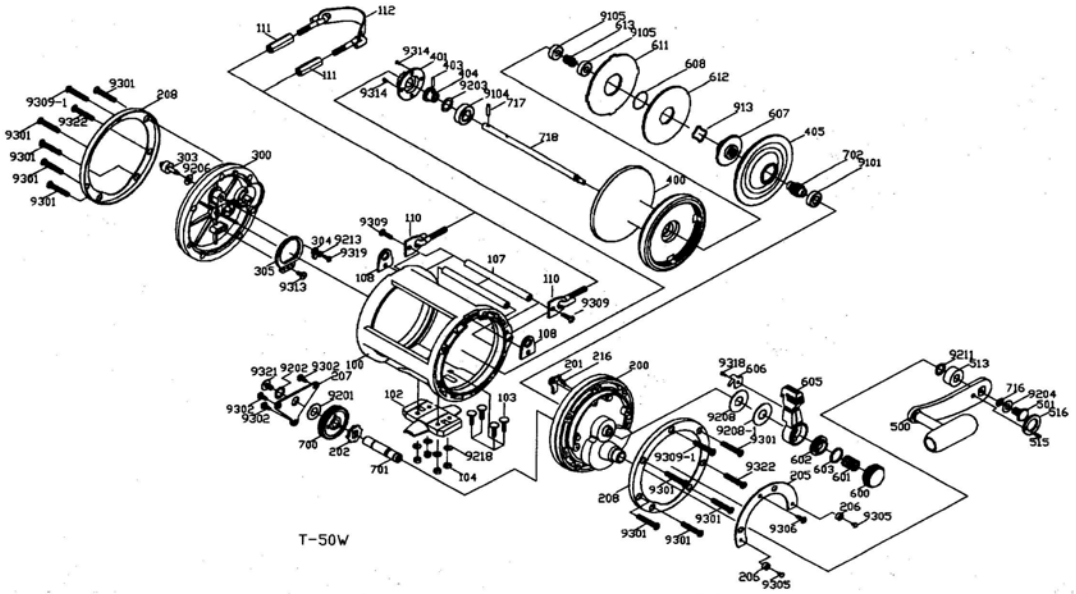

T-50W SPARE PARTS LIST

X-MEANS PAINT OR INJ. S-MEANS SERIES NUMBER

KEYNO	PARTSNO	PARTNAME	KEYNO	PARTSNO	PARTNAME
100	11100009111831	MAIN BODY	607	11607004-02002	PINIONGUARD
102	11102007-04001	BODY FOOT	608	11608002-06	DRAG WASHER RETAINER
103	11103002-06002	BODY FOOT SCREW	611	11611004-00	EARED WASHER
104	11104001-06	BODY FOOT NUT	612	11612004-06	KEY WASHER
107	11107005-03907	LINE GUARD	613	11613003-06	CLICK RETAINER SPRING
108	11108002-067	HANGER	700	11700002-03002	DRIVE GEAR
110	11110001-03	HANGER ASSY	701	11701002-26	DRIVE GEAR SHAFT
111	11111001-06	HANGER NUT	702	11702004-06003	PINION GEAR
112	11112001-06	HANGER ASSY	716	11716002-07	OIL SEAL
200	1120001101833	RIGHT SIDE PLATE ASSY,	717	11717003-06	STOPPER PIN
201	11201002-05	ANTI-RE PAWL	718	11718004-06	MAIN SHAFT
202	11202002-06	RATCHET	913	11913001-05907	DRAG SPRING WASHER
205	11205002-061	DECORATION PLATE	9101	01091705-6	MAIN SHAFT BALL BEARING
206	11206001-03001	LEVER DRAG STOPPER CAP	9104	01102005-6	PRESSURE LOAD BLOCK BALL BEAR
207	11207001-06907	HOLD PLATE	9105	01071405-6	DRAG WASHER BALL BEARING
208	11208001-06002	SIDE PLATE COVERS	9201	029.1x18x0.3-1	DRIVE GEAR WASHER
216	11216001-06	ANTI-RE PAWL SPRING	9202	029.1x13x0.2-6	HOLD PLATE WASHERE
300	11300003101833	LEFT SIDE PLATE	9203	0210x15x0.5-6	PRESSURE LOAD BLOCK WASHER
303	11303003-03907	CLICK BOTTOM	9204	026x13x0.4-8	HANDEL NUT WASHER
304	11304003-06	CLICK PAWL	9206	024.05x10x0.2-8	CLICK BOTTOM WASHER
305	11305001-01	CLICK PAWL SPRING	9208	0210.1x23.8x1-9	LEVEL DRAG WASHER
400	11400007-049091	SPOOL	9208-1	0210.1x23.8.6-6	LEVEL DRAG WASHER
401	11401002-02905	CLICK GEAR	9211	029.1x13x0.3-6	HANDLE COVER WASHER
403	11403001-06	LOCATING PIN	9213	023.0x7x0.5-6	CLICK BOTTOM WASHER
404	11404002-03002	PRESSURE LOAD BLOCK	9218	024.6x8x0.2-6	BODY FOOT WASHER
405	11405005-01	SPOOL COVER	9301	03224x21-61	RIGHT SIDE PLATE SCREW
500	11500009165	HANDLE	9302	0342x3x6-61	HOLD PLATE SCREW
501	11501005-06	HANDEL NUT	9305	03122.6x8-61	LEVER DRAG STOPPER CAP SCREW
513	11513006-063	HANDLE COVER	9306	03222.6x9.5-61	DECORATION PLATE SCREW
515	11515001-03907	HANDLE SCREW CAP WASHER	9309	03414x15-31	HANGER SCREW
516	11516006-06	HANDLE NUT RETAINER	9309-1	03224x24-61	HANGER SCREW
600	11600013-03907	CAST CONTROL CAP	9313	03327.52.6x6-61	CLICK PAWL SPRING SCREW
601	11601001-06	COMPRESSION SPRING	9314	03212.6x5.5-61	CLICK GEAR SCREW
602	11602001-05	ADJUST BLOCK	9318	03422x5.5-61	LEVEL DRAG SCREW
603	11603001-07	O RING	9319	03312x5-61	CONTROL PIN SCREW
605	11605002-0183	LEVEL DRAG	9321	034111.5x4x8-61	DRIVE GEAR SHAFT SCREW
606	11606001-06	LEVEL DRAG CLICK PAWL	9322	03214x26-617	WORMGUIDE SUPPORT BAR SCREW