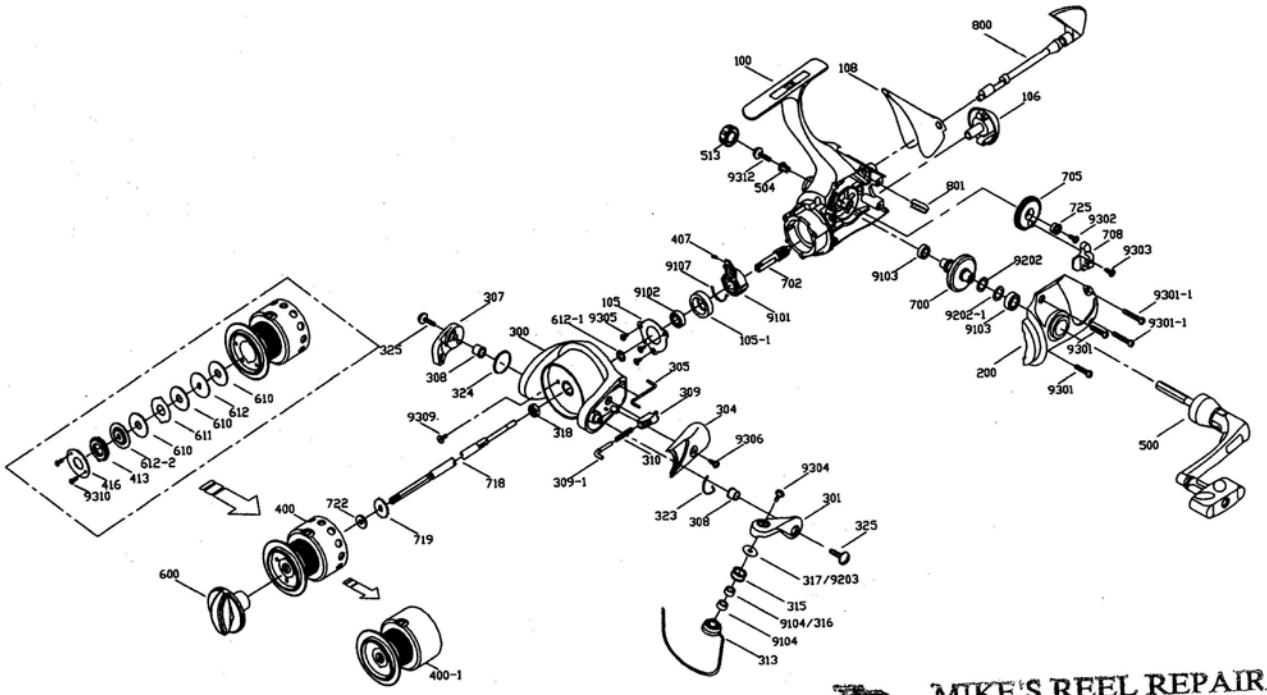

MIKE'S REEL REPAIR
#108 - 31060 Peardonville Road
Abbotsford, B.C., Canada V2T 6K5
Toll Free 1-888-404-1119

EFS-50 **X-MEANS PAINT OR INJ. COLOR**

SIZE	50	
KEY NO.	PARTS NO.	PARTS NAMES
100	1210007411614A	MAIN BODY ASSY.
105	12105010-06	ONE WAY BEARING FIX PLATE
105-1	12105011-03	BALL BEARING BHSHING
106	12106017-01914	DRAG KNOB SEAT
108	12108002-0A915	BODY/SIDE PLATE COVER
200	12200058-01614	SIDE PLATE
300	12300109-01613	ROTOR
301	12301025-01614	BAIL ARM
304	12304053-01614	BAIL ARM COVER
305	12305046-05	KICK LEVEL
307	12307022-12614	BAIL HOLDER
308	12308006-03907	BAIL ARM/BAIL HOLDER BUSHING
309	12309010-01	BAIL ARM YOKE
309-1	12309013-061	BAIL ARM SUPPORT PIN
310	12310012-06	COMPRESSION SPRING
313	1231307906002F	BAIL ASSY.
315	12315020-03917	LINE ROLLER
318	12318010-03	ROTOR NUT
323	12324004-011	BAIL ARM WASHER
324	12324002-01	BAIL HOLDER WASHER
325	12325002-061	BAIL ARM/HOLDER SCREW
400	1240007404022	NORMAL SPOOL ASSY.
400-1	1240081204001	SPARE SPOOL ASSY
407	12407006-16	CLUTCH LEVER SPRING
413	12413002-17	WATER PROOF RETAINER
416	12416005-06001	SPOOL HOLD PLATE
500	1250003904614D	ONE TOUCH HANDLE ASSY.
504	12504003-01	HANDLE SCREW CAP WASHER
513	12513017-04927	HANDLE SCREW CAP
600	1260004201613	DRAG KNOB ASSY.
610	12610010-000	DRAG WASHER
611	12611008-06001	EARED WASHER

SIZE	50	
KEY NO.	PARTS NO.	PARTS NAMES
612	12612019-06001	ROTOR WASHER
612-1	12612024-06	KEY WASHER
612-2	12612021-06	KEY WASHER
700	12700031-121	DRIVE GEAR
702	12702056-0321	PINION GEAR
705	12705024-02	TRANSMISSION GEAR
708	12708042-028	OSCILLATION SLIDER
718	12718101-06	MAIN SHAFT
719	12719012-06	CLICK GEAR
722	12722015-01	CLICK GEAR WASHER
725	12725018-03	TRANSMISSION GEAR BUSHING
800	12800028-0170	ANTI-REVERSE BUTTON
801	12801013-06	ANTI-REVERSE BUTTON SPRING
9101	010824-562	ONE WAY BALL BEARING
9102	01081605-61	BALL BEARING
9103	01081404-61	BALL BEARING
9104	01050825-61	BALL BEARING
9107	010824-572	BALL BEARING RETAINER
9202	028.1x12x0.2-6	DRIVE GEAR WASHER
9202-1	028.1x12x0.05-3	DRIVE GEAR WASHER
9203	023.5x12.1x.5-6	LINE ROLLER WASHER
9301	03122.6x10-61	SIDE PLATE SCREW
9301-1	03122.6x15-61	SIDE PLATE SCREW
9302	03222.6x6-61	TRANSMISSION GEAR BUSHING SCREW
9303	03212.3x7-611	OSCILLATION SLIDER SCREW
9304	03413.5x9-61	LINE ROLLER SCREW
9305	03325.92.66.561	ONE WAY BEARING FIX PLATE SCREW
9306	03422.6x8-61	BAIL ARM COVER SCREW
9309	033272.6x4.5-61	ROTOR NUT SCREW
9310	03212x5-61	SPOOL RIM SCREW
9312	03418.1x3x12-61	HANDLE SHAFT SCREW