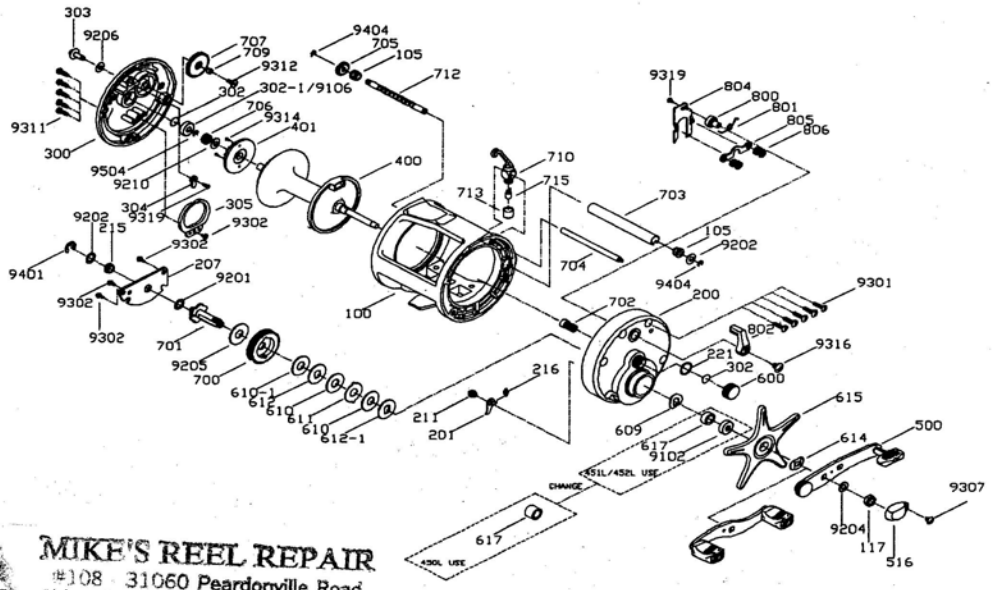

MIKE'S REEL REPAIR
#108 31060 Peardonville Road
Abbotsford, B.C., Canada V2T 6K5
Toll Free 1-888-404-1119

CL 450L/452L SPARE PARTS LIST X-MEANS PAINT OR INJ. COLOR

KEY NO	PARTS NO.	PARTS NAMES	0BB	2BB	KEY NO.	PARTS NO.	PARTS NAMES	0BB	2BB
100	11100016011	MAIN BODY ASSY.	•	•	702	11702005-061	PINION GEAR	•	•
105	11105003-01	WORM SHAFT BUSHING	•	•	703	11703006-03907	LEVEL WIND GUARD	•	•
117	14117001-03	HANDLE NUT	•	•	704	11704004-03907	STABILIZER BAR	•	•
200	11200013-01001	RIGHT SIDE PLATE	•	•	705	11705008-06	WORM SHAFT GEAR	•	•
201	11201001-06	ANTI-REVERSE PAWL	•	•	706	11706003-06	IDLE GEAR	•	•
207	11207003-06001	HOLD PLATE	•	•	707	11707003-01	MEDIUM TRANSMISSION GEAR	•	•
211	11211002-03001	ANTI-REVERSE PAWL PIN	•	•	709	11709002-03	TRANSMISSION GEAR BUSHING	•	•
215	11215009-03001	HOLD PLATE BUSHING	•	•	710	1171000606	LINE GUIDE ASSY.	•	•
216	11216001-06	ANTI-REVERSE PAWL SPRING	•	•	712	11712011-03907	WORM SHAFT	•	•
221	11221001-07	O RING	•	•	713	11713001-03907	PAWL CAP	•	•
300	11300026-01	LEFT SIDE PLATE	•	•	715	11715003-06	LINE GUIDE PAWL	•	•
302	11302002-06001	SPACER	•	•	800	11800002-02002	CLUTCH CAM	•	•
302-1	11302005-03	SPOOL SHAFT BUSHING	•		801	11801001-06	CLUTCH CAM SPRING	•	•
303	11303004-03907	CLICK BUTTON	•	•	802	11802004-01	CLUTCH BAR	•	•
304	11304003-06	CLICK PAWL	•	•	804	11804001-06	CLUTCH CAM SLIDER	•	•
305	11305001-01001	CLICK PAWL SPRING	•	•	805	11805001-06	PINION GEAR YOKE	•	•
311	11311005-06001	SIDE PLATE COVERS	•	•	806	11806001-06	YOKE SPRING	•	•
400	11400013-0112	GRAPHITE SPOOL	•	•	9102	01081605-61	BALL BEARING		•
401	11401001-05002	CLICK GEAR	•	•	9106	01041104-61	BALL BEARING		•
500	1150001004907	BALANCE WEIGHT HANDLE ASSY.	•	•	9201	025.1x8x0.2-6	DRIVE GEAR SHAFT WASHER	•	•
516	11516001-01	HANDLE NUT HOLDER	•	•	9202	025.1x10.5x.2-6	LEVEL WIND GUARD WASHER	•	•
600	11600014-03001	CAST CONTROL CAP	•	•	9205	028.2x22x1-1	DRIVE GEAR WASHER	•	•
609	11609003-05907	DRAG SPRING WASHER	•	•	9206	024.05x10x0.2-8	CLICK BUTTON WASHER	•	•
610	11610004-006A	DRAG WASHER	•	•	9210	025.1x10.5x.5-6	LINE GUIDE WASHER	•	•
610-1	11610003-006	DRAG WASHER	•	•	9301	03423.0x13-61	RIGHT SIDE PLATE SCREW	•	•
611	11611005-06	EARED WASHER	•	•	9302	03322.6x6-61	HOLD PLATE SCREW	•	•
612	11612007-06001	KEY WASHER	•	•	9307	03412.6x4-61	HANDLE NUT HOLDER SCREW	•	•
612-1	11612007-06003	KEY WASHER	•	•	9311	03123.0x10-61	LEFT SIDE PLATE SCREW	•	•
614	11614001-06	TENSION WASHER	•	•	9312	03322.6x7.5-61	TRANSMISSION GEAR SCREW	•	•
615	11615005-01001	STAR DRAG	•	•	9314	03222x4.5-61	CLICK GEAR SCREW	•	•
617	11617005-03	DRIVE GEAR SHAFT BUSHING		•	9316	03414x5-617	CLUTCH BAR SCREW	•	•
617	11617006-01	DRIVE GEAR SHAFT BUSHING	•		9319	03312x5-61	CLUTCH CAM SCREW	•	•
700	11700006-032	DRIVE GEAR	•	•	9401	11900001-06	DRIVE GEAR SHAFT "E" RETAINER	•	•
701	1170101603001A	DRIVE GEAR SHAFT ASSY.(AUTO TRIP)	•	•	9404	12900001-06	WORM SHAFT "E" RETAINER	•	•
701	1170101603001	DRIVE GEAR SHAFT ASSY.(MANUAL TRIP)	•	•	9504	11901001-06	IDLE GEAR"C" RETAINER	•	•