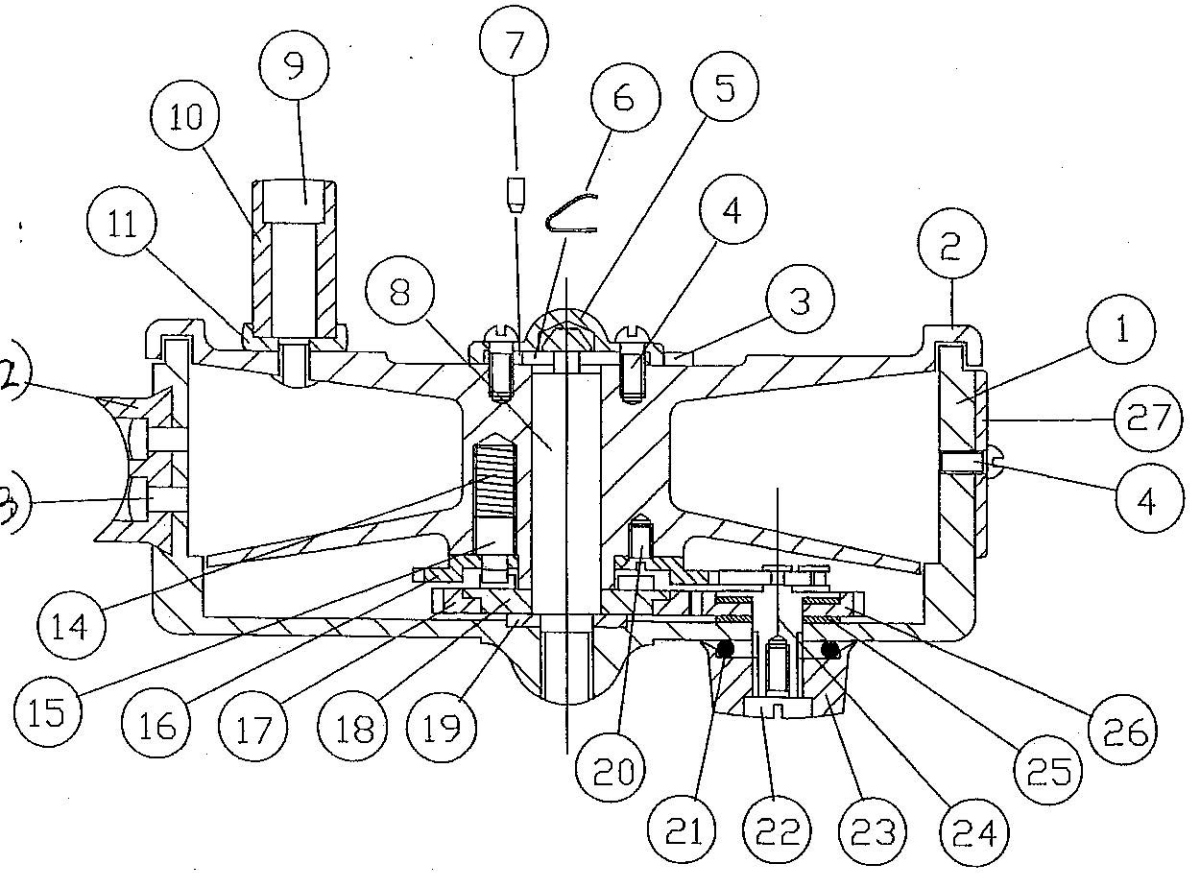

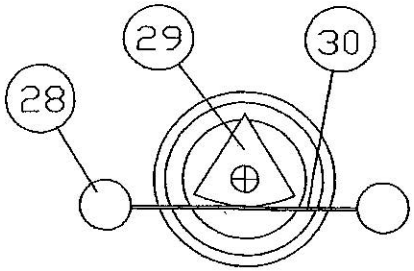

For parts and service

Call toll free 1-888-404-1119

www.mikesreelrepair.com

	KEY
1	Frame
2	Drum
3	Latch Bar
4	Latch, L/G screw 3 off
5	Latch cover
6	Latch spring
7	Latch stud
8	Spindle
9	Handle wire
10	Handle knob
11	Handle cup
12	Back
13	Back studs 2 off
14	Plunger spring
15	Plunger
16	Checkwheel
17	Centre gear
18	Pick-up plate
19	Spindle washer
20	Checkwheel screw
21	'O' ring
22	Stop screw
23	Reg knob
24	Drawbar
25	Friction washer
26	Driven gear
27	Lineguard
28	Check spring stud 2 off
29	Tongue
30	Check spring

MODIFICATION	DATE

HOUSE OF HARDY
ALNWICK

ITEM

MARQUIS DISC

MATERIAL

DATE | DRAWN BY I.W.E

BIN No | SCALE

www.MikesReelRepair.com