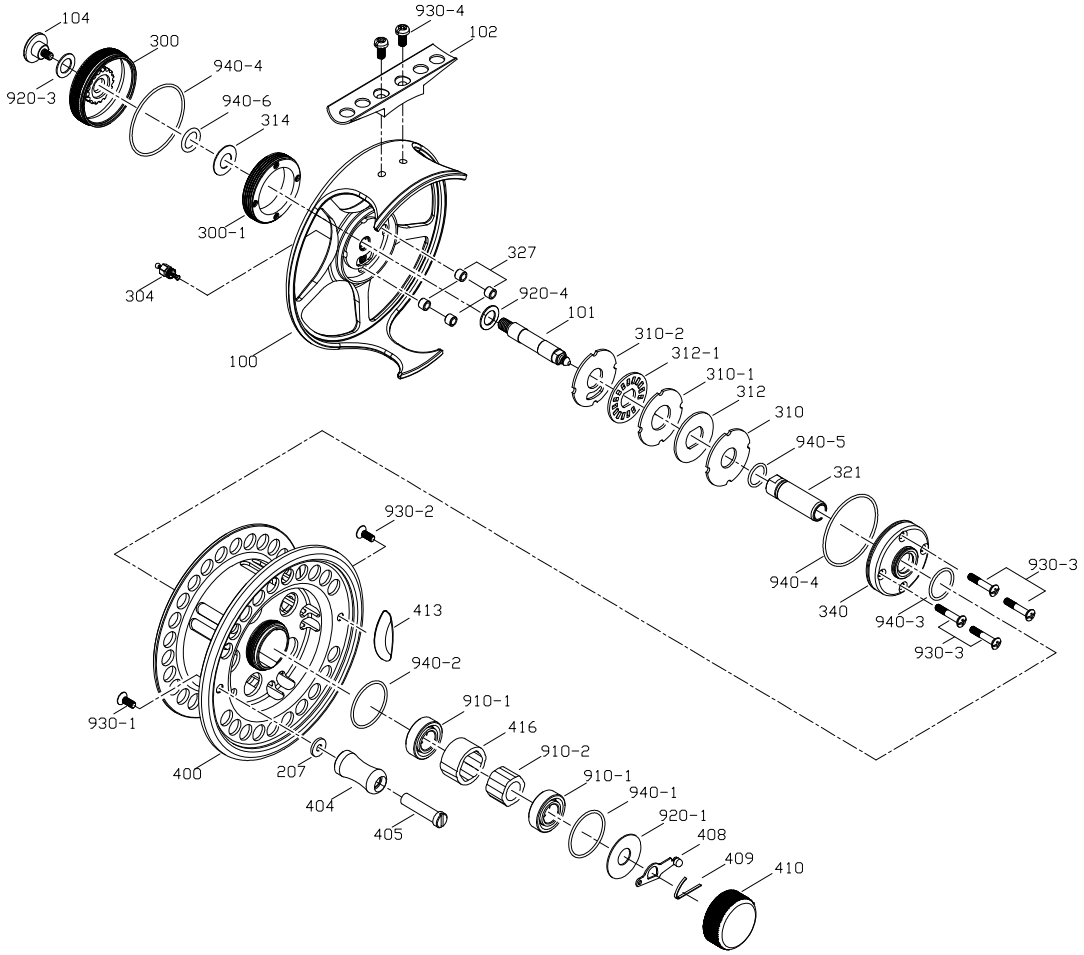

Helios 5/6 PARTS LIST

KEY NO	PARTS NO	PARTS NAME	KEY NO	PARTS NO	PARTS NAME
100	31000688	MAIN BODY	408	34080009	SPOOL RETAINER ASSY.
101	31010039	MAIN SHAFT	409	34090001	SPOOL RETAINER SPRING
102	31020143	BODY FOOT	410	34100037	SPOOL COVER ASSY.
104	31040023	MAIN SHAFT SCREW	413	34130015	COUNTER WEIGHT
207	32070003	SCREW MAT	416	34160008	ONEWAY BEARING BUSHING
300	33000089	DRAG KNOB	910-1	0910099	BALL BEARING
300-1	33000084	DRAG KNOB RETAINER	910-2	0910090	BEARING ASSY.
304	33040020	CLICK PIN ASSY.	920-1	0920010	WASHER
310	33100017	DRAG WASHER	920-3	0920127	WASHER
310-1	33100015	DRAG WASHER	920-4	0920434	WASHER
310-2	33100020	DRAG WASHER	930-1	0930086	SCREW
312	33120004	GRAZE KEY WASHER	930-2	0930098	SCREW
312-1	33120005	KEY WASHER	930-3	0930115	SCREW
314	33140002	SPRING WASHER	930-4	0930897	SCREW
321	33210011	MAIN SHAFT BUSHING	940-1	0940014	O RING,
327	33270003	DRAG KNOB BUSHING	940-2	0940013	O RING,
340	33400003	DRAG WASHER RETAINER	940-3	0940009	O RING,
400	34000630	SPOOL	940-4	0940022	O RING
404	34040023	HANDLE KNOB	940-5	0940007	O RING
405	34050012	HANDLE KNOB RIVET	940-6	0940025	O RING