Daiwa
COMMITTED TO TOTAL QUALITY

Please order by part number, not key number.

SPINNING REEL REGAL RG-Z4500BL/RG-Z5000BL

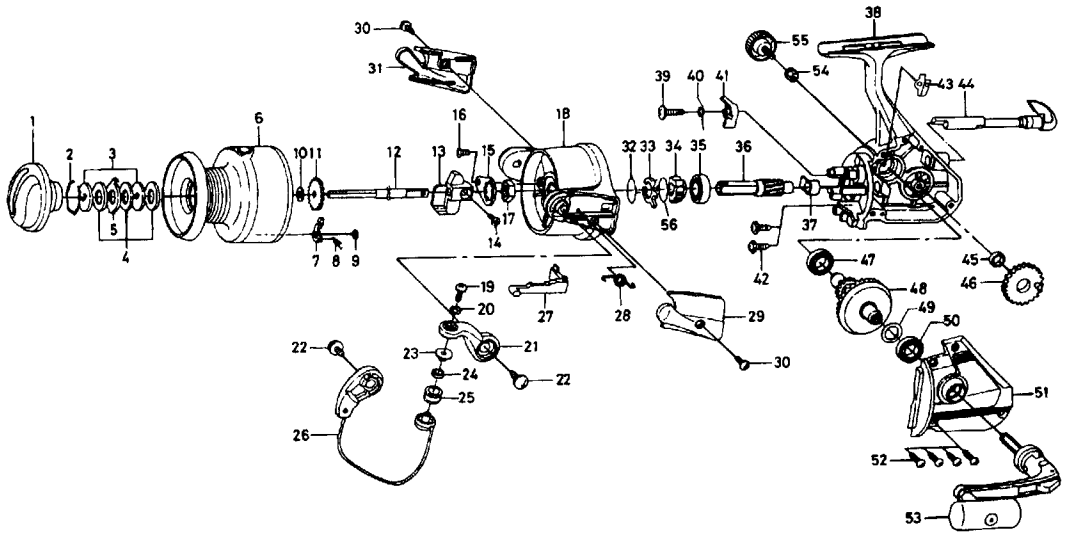

Key No.	Parts No.	Parts Name
2-9	L13-5103	Spool assembly
1	F36-9803	Drag knob
2	171-7701	Drag washer retainer
3	L03-1301	Key washer
4	373-3712	Drag washer
5	B89-9501	Eared washer
6	L13-5203	Spool assembly
7	B07-8201	Click pawl
8	145-2101	Click spring
9	320-1402	Click retainer
10	F09-4701	Spool washer
11	L02-1401	Click gear
12	L10-7302	Main shaft
13	L10-6601	Oscillating slider
14	351-8901	Oscillating slider screw
15	B02-1601	Rotor nut holding plate
16	L01-1702	Rotor nut holding plate screw
17	340-8301	Rotor nut
18	F36-8603	Rotor
19	E45-4002	Line roller screw
20	160-8401	Lock washer
21	F36-9003	Bail arm
22	E00-7601	Bail arm screw
23	F08-8301	Line roller collar
24	F05-5601	Ball bearing A
25	F05-8901	Line roller
26	F38-6001	Bail assembly
27	L10-6901	Bail trip lever
28	F43-6401	Bail spring
29	F36-9103	Bail spring cover
30	E24-8101	Bail spring cover screw
31	F36-9503	Bail trip cover
32	F21-2001	Anti-reverse pawl spring A
33	L06-6801	Anti-reverse pawl spring B
34	F36-8501	Anti-reverse ratchet
35	637-6101	Ball bearing B
36	L10-7701	Pinion gear
37	B88-0001	Pinion collar
38	E53-3001	Body assembly
39	L06-6501	Anti-reverse pawl screw
40	L13-7201	Anti-reverse pawl spring C
41	L06-6301	Anti-reverse pawl
42	L01-1601	Bearing retainer screw
43	E01-1801	Ant-reverse cam spring
44	L10-0712	Anti-reverse lever
45	B47-4101	Oscillating gear collar
46	L11-7001	Oscillating gear
47	B54-6001	Ball bearing C
48	B78-9501	Drive gear
49	371-2824	Drive gear washer
50	B54-6001	Ball bearing D
51	E53-3101	Side cover
52	B83-5002	Side cover screw
53	E53-3201	Handle assembly
54	F40-9001	Handle collar
55	L00-9106	Handle lock screw
56	F43-1001	Ratchet washer

RG-Z5000BL Special Parts

2-9	L13-6303	Spool assembly
18	F37-1003	Rotor assembly
26	F38-6101	Bail assembly
27	L10-7101	Bail trip lever
38	E53-3002	Body assembly
51	E53-3102	Side cover