Daiwa
COMMITTED TO TOTAL QUALITY

Please order by part number, not key number.

SPINNING REEL REGAL RG-Z3550BL/RG-Z4050BL

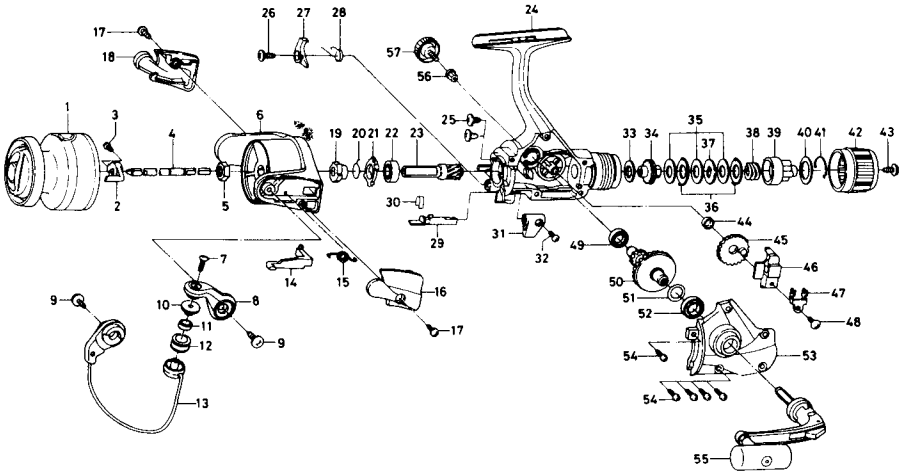

Key No.	Parts No.	Parts Name
1	F33-7501	Spool assembly (Aluminum spool)
	F35-9201	Spool assembly (Extra Spool)
2	F20-1602	Spool metal
3	351-1001	Spool metal screw
4	F20-0102	Main shaft
5	340-6602	Rotor nut
6	F32-9203	Rotor
7	B67-9304	Line roller screw
8	F31-0203	Bail arm
9	B84-2102	Bail arm screw
10	F06-6301	Line roller collar
11	F05-5601	Ball bearing A
12	F05-8901	Line roller
13	F33-3301	Bail assembly
14	E46-2101	Bail trip lever
15	F12-8901	Bail spring
16	F31-4303	Bail spring cover
17	E24-8101	Bail spring cover screw
18	F31-4403	Bail trip cover
19	F31-9801	Anti-reverse ratchet
20	F20-1101	Anti-reverse pawl spring A
21	F20-1001	Spring holder
22	L03-6502	Ball bearing B
23	E52-0101	Pinion gear
24	F20-0019	Body assembly
25	E03-7801	Bearing retainer screw
26	E00-7101	Anti-reverse pawl screw
27	F19-9901	Anti-reverse pawl
28	F19-9801	Anti-reverse pawl spring B
29	F19-5101	Anti-reverse cam
30	F19-5201	Anti-reverse cam spring
31	F19-4903	Anti-reverse lever
32	B64-6602	Anti-reverse lever screw
33	B46-9505	Drag washer A
34	L11-0701	Click gear
35	L11-0801	Drag washer B
36	L11-0901	Eared washer
37	L11-1001	Key washer
38	F06-2301	Drag coil spring
39	F20-0501	Drag collar
40	L11-0101	Drag collar washer
41	L08-0701	Drag washer spring
42	F33-7902	Drag knob
43	E03-7802	Drag knob screw
44	F13-1601	Oscillating gear collar
45	E46-1501	Oscillating gear
46	F19-9201	Oscillating slider
47	F20-0201	Oscillating slider retainer
48	351-0901	Oscillating slider screw
49	631-6901	Ball bearing C
50	E52-0201	Drive gear
51	373-7802	Drive gear washer
52	631-6901	Ball bearing C
53	F20-0310	Side cover
54	E15-8602	Side cover screw
55	F33-5501	Handle assembly
56	E12-7501	Handle collar
57	B92-5007	Handle lock screw

RG-Z4050BL Special Parts

1	F33-7701	Spool assembly (Aluminum spool)
	F35-9401	Spool assembly (Extra Spool)
6	F33-4803	Rotor
13	F33-4701	Bail assembly
14	E46-3101	Bail trip lever
24	F20-0021	Body assembly
53	F20-0312	Side cover