Daiwa
COMMITTED TO TOTAL QUALITY

SPINNING REEL **PR1605H/2005H**

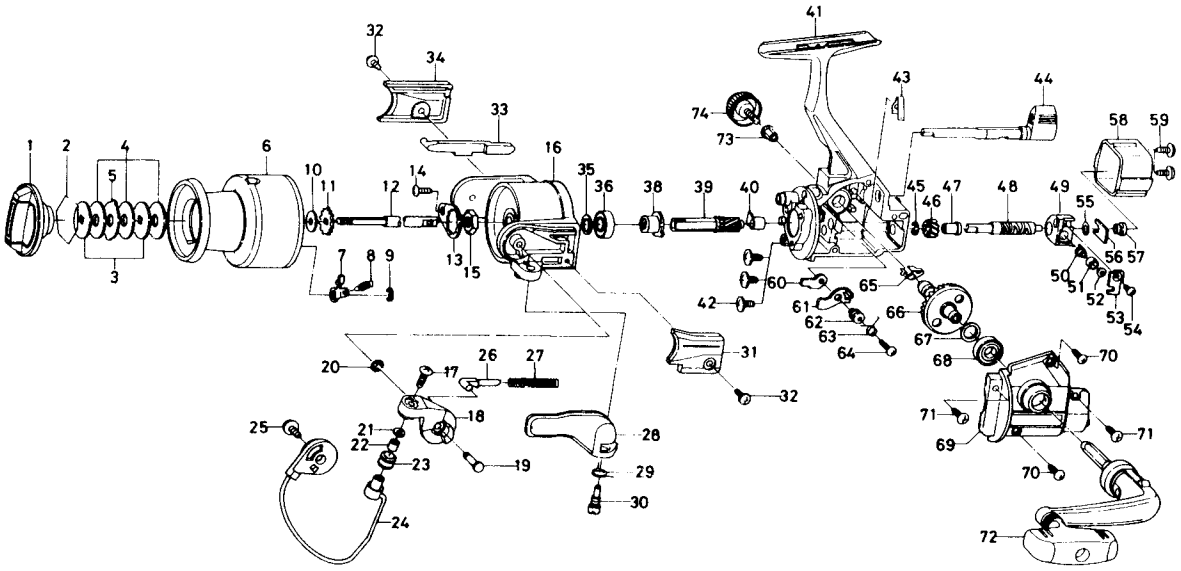

Key No. 2-9
E39-1401 Spool assembly

Key No.	Parts No.	Parts Name
1	E37-8801	Drag knob
2	171-7701	Drag washer retainer
3	F01-2001	Key washer
4	E13-6003	Drag washer
5	373-3603	Eared washer
6	E39-1301	Spool assembly
7	B07-5303	Click pawl
8	E40-3101	Click spring
9	320-5901	Click retainer
10	E39-7901	Spool washer
11	270-6901	Click gear
12	E37-7001	Main shaft
13	B66-2601	Rotor nut holding plate
14	B93-3001	Rotor nut holding plate screw
15	B10-5701	Rotor nut
16	E40-5301	Rotor
17	B67-9305	Line roller screw
18	E36-9501	Bail arm
19	E36-9601	Bail arm screw
20	320-5901	Bail arm screw retainer
21	B55-4301	Line roller washer
22	B45-1501	Line roller bushing
23	E22-5101	Line roller
24	E37-9401	Bail
25	E00-7102	Bail trip cam screw
26	E36-4401	Bail spring shaft
27	E37-7801	Bail spring
28	E36-9801	Trigger lever
29	E36-9901	Trigger spring
30	E37-0001	Trigger screw
31	F01-1701	Bail spring cover
32	E36-4201	Bail spring cover screw
33	F01-1601	Bail trip lever
34	E37-8201	Bail trip cover
35	371-2827	Ball bearing retaining washer
36	B54-6001	Ball bearing A
38	E40-1001	Anti-reverse ratchet
39	E37-6601	Pinion gear
40	B88-0001	Pinion collar
41	E37-5502	Body
42	E03-7801	Bearing retainer screw
43	E26-8701	Anti-reverse cam spring
44	E37-6001	Anti-reverse lever
45	320-5901	Worm shaft gear retainer
46	E37-6501	Worm shaft gear
47	E39-3501	Worm shaft bush
48	E37-6401	Worm shaft
49	E37-6301	Oscillating slider
50	E19-1201	Oscillating pawl
51	E19-1301	Oscillating pawl bush
52	375-0800	Oscillating pawl washer
53	E37-6901	Oscillating slider cover
54	E40-1501	Oscillating slider cover screw
55	375-4100	Worm shaft washer
56	E36-3801	Worm shaft retainer
57	E39-3601	Worm shaft collar
58	E37-7601	Rear cover
59	E24-8102	Rear cover screw
60	B96-5301	Anti-reverse pawl plate
61	E27-7002	Anti-reverse pawl
62	B96-5501	Anti-reverse pawl collar
63	B96-5601	Anti-reverse pawl spring A
64	B00-9701	Anti-reverse pawl screw
65	E37-7201	Anti-reverse pawl spring B
66	E37-7101	Drive gear
67	373-7300	Drive gear washer
68	631-6901	Ball bearing B
69	E37-7302	Side cover
70	E15-3601	Side cover screw A
71	F15-8602	Side cover screw B
72	E38-7101	Handle assembly
73	E12-7501	Handle collar
74	F03-5602	Handle lock screw

PR2005H Special Parts

2-9	E39-1601	Spool assembly
6	E39-1501	Spool assembly
16	E40-5401	Rotor
24	E38-0701	Bail
41	E37-5504	Body
69	E37-7305	Side cover
72	E38-9101	Handle assembly