Daiwa
COMMITTED TO TOTAL QUALITY

SPINNING REEL GS1650T/2050T

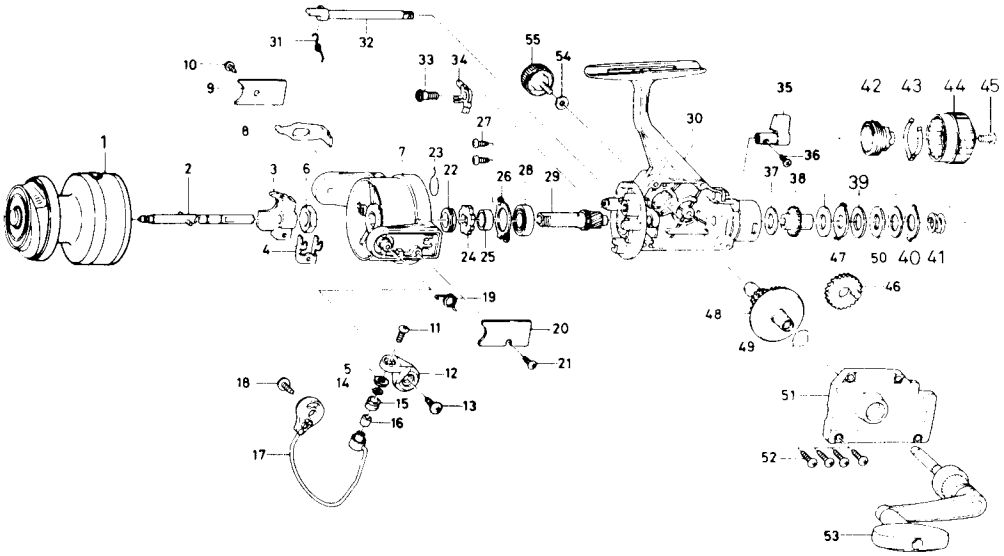

Key No.	Parts No.	Parts Name
1	E08-6502	Spool
2	B83-9801	Main shaft
3	E08-7801	Oscillating slider
4	B93-7202	Oscillating slider retainer
5	B97-9801	Line roller washer B
6	B10-5701	Rotor nut
7	B82-2001	Rotor
8	B83-6701	Bail trip lever
9	B76-9703	Bail trip cover
10	B83-4402	Bail trip cover screw
11	B67-9302	Line roller screw
12	B68-1102	Bail arm
13	B84-2102	Bail arm screw
14	B55-4301	Line roller washer A
15	250-3921	Line roller
16	B45-1501	Line roller bushing
17	K02-2202	Bail
18	B84-2102	Bail trip cam screw
19	K04-9801	Bail spring
20	B77-2202	Bail spring cover
21	B83-4402	Bail spring cover screw
22	501-9901	Spring holder
23	145-0901	Anti-reverse pawl spring
24	280-9001	Anti-reverse ratchet
25	K03-1701	Spacing sleeve
26	B35-6301	Bearing retainer
27	B83-4402	Bearing retainer screw
28	B54-6001	Ball bearing
29	B83-6101	Pinion gear
30	K05-2001	Body
31	144-0321	Anti-reverse cam spring
32	B83-6001	Anti-reverse cam
33	B83-6301	Anti-reverse pawl screw

Key No.	Parts No.	Parts Name
34	B74-5501	Anti-reverse pawl
35	E08-6101	Anti-reverse lever
36	B12-8201	Anti-reverse lever screw
37	B46-9505	Drag washer A
38	B76-9803	Click gear
39	E14-3301	Drag washer B
40	B83-9501	Eared washer A
41	K02-6701	Drag coil spring
42	B77-0004	Drag screw
43	B77-0301	Drag washer spring
44	K05-1701	Drag knob
45	352-1107	Drag knob spring screw
46	B74-3701	Oscillating gear
47	K05-0301	Eared washer B
48	B83-6801	Drive gear
49	373-7800	Drive gear washer
50	E02-4401	key washer
51	K05-2402	Side cover
52	B83-5002	Side cover screw
53	E00-2502	Handle
54	B92-4902	Handle lock washer
55	B92-5003	Handle lock screw

GS2050T **Special Parts**

1	K05-4701	Spool
7	B82-2201	Rotor
8	B83-7301	Bail trip lever
17	K02-2402	Bail
30	K05-2002	Body
51	K05-2404	Side cover
53	E00-2802	Handle