Daiwa
COMMITTED TO TOTAL QUALITY

SPINNING REEL **AS7050/9050**

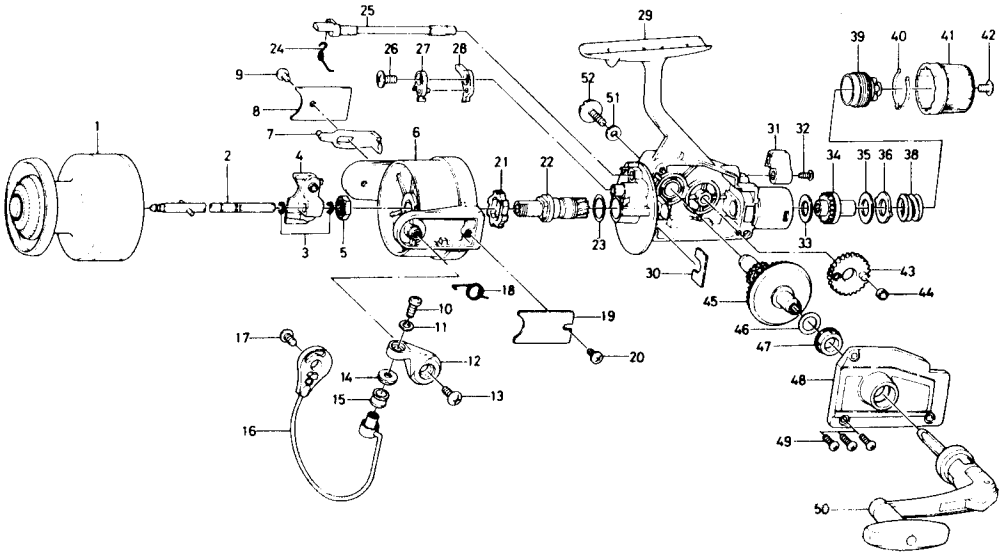

Key No.	Parts No.	Parts Name
1	B79-9401	Spool
2	B79-8501	Main shaft
3	320-8702	Oscillating slider retainer
4	B77-7302	Oscillating slider
5	342-5001	Rotor nut
6	B80-4801	Rotor
7	B77-6501	Bail kick lever
8	B77-6603	Bail kick lever cover
9	351-6102	Bail kick lever cover screw
10	B11-2801	Bail screw
11	375-1101	Bail washer
12	B80-3501	Arm lever
13	352-1103	Arm lever screw
14	501-2003	Roller collar
15	250-4502	Line roller
16	B79-7502	Bail
17	352-1103	Bail holder screw
18	B19-7201	Bail spring
19	B77-6403	Bail spring cover
20	351-6102	Bail spring cover screw
21	280-5403	Ratchet
22	B79-7201	Pinion gear
23	375-9700	Rotor washer
24	144-0321	Anti-reverse cam spring
25	B80-4401	Anti-reverse cam
26	B80-8001	Anti-reverse claw screw
27	B80-4301	Anti-reverse claw plate
28	B79-7101	Anti-reverse claw
29	B79-6701	Body
30	B80-8101	Pinion retainer
31	B80-4501	Anti-reverse lever
32	352-2502	Anti-reverse lever screw
33	B79-7801	Drag washer A
34	B79-7901	Click gear
35	B77-5004	Drag washer B
36	B77-5201	Drag washer C
38	B91-3801	Drag knob spring
39	B79-8001	Drag screw
40	B79-8101	Drag washer spring
41	B79-8201	Drag knob
42	352-1103	Drag knob screw
43	B78-9701	Oscillating gear
44	B78-9801	Oscillating collar
45	B79-8401	Drive gear
46	371-2800	Drive gear washer
47	B07-3303	Bearing
48	B79-8701	Body cover
49	351-5904	Body cover screw
50	B80-4901	Handle
51	371-9521	Handle washer
52	B50-5601	Handle screw

AS9050 special parts

1	B80-0001	Spool
6	B80-5001	Rotor
7	B77-9801	Bail kick lever
16	B79-9801	Bail
29	B79-6702	Body
48	B79-8702	Body cover