Daiwa
COMMITTED TO TOTAL QUALITY

SPINNING REEL **AS1650/2050**

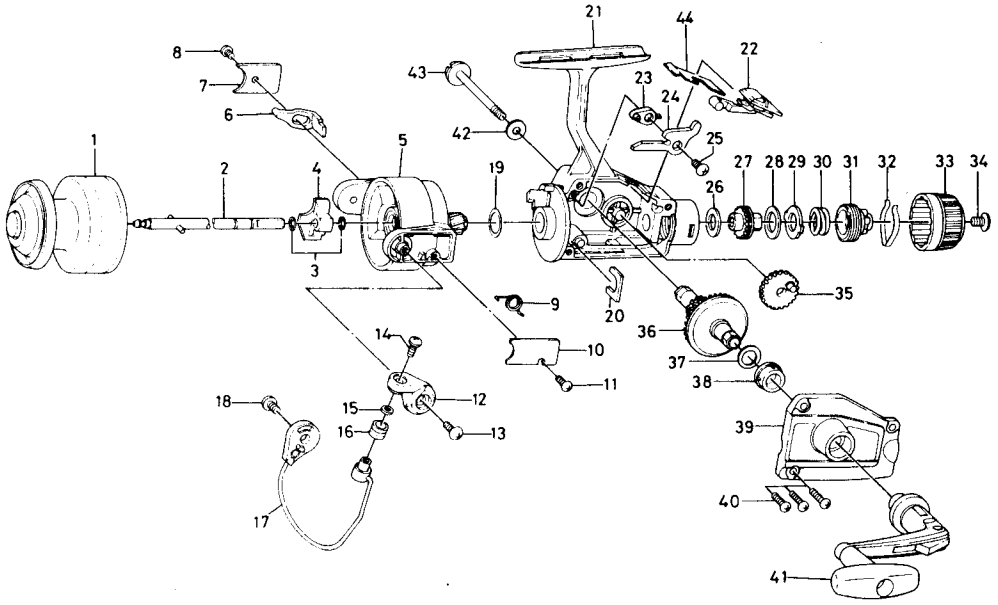

Key No.	Parts No.	Parts Name
1	B78-4601	Spool assembly
2	B77-0801	Main shaft
3	320-8202	Oscillating slider retainer
4	B77-0701	Oscillating slider
5	B77-3501	Rotor
6	B77-3701	Bail kick lever
7	B76-9702	Bail kick lever cover
8	352-0402	Bail kick lever cover screw
9	B18-7702	Bail spring
10	B77-2201	Bail spring cover
11	352-0402	Bail spring cover screw
12	B76-0201	Arm lever
13	351-6102	Arm lever screw
14	B67-9301	Bail screw
15	B55-4301	Roller collar
16	250-3921	Line roller
17	B77-3801	Bail
18	351-6102	Bail holder screw
19	372-8600	Rotor washer
20	B60-3401	Pinion retainer
21	B77-1802	Body
22	B74-6401	Anti-reverse lever
23	B76-8501	Anti-reverse claw plate
24	B76-8601	Anti-reverse claw
25	351-6102	Anti-reverse claw screw
26	B46-9504	Drag washer A

Key No.	Parts No.	Parts Name
27	B76-9801	Click gear
28	B78-6601	Drag washer B
29	373-3603	Drag washer C
30	B91-3701	Drag knob spring
31	B77-0003	Drag screw
32	B77-0301	Drag washer spring
33	B77-0401	Drag knob
34	352-1103	Drag knob spring screw
35	B74-3701	Oscillating gear
36	B77-0601	Drive gear
37	373-7800	Drive gear washer
38	B12-9002	Bearing
39	B77-1004	Body cover
40	351-5904	Body cover screw
41	B91-1401	Handle
42	372-3501	Handle washer
43	B11-5801	Handle screw
44	B79-0101	Anti-reverse lever spring

AS2050 special parts

1	B78-4401	Spool assembly
5	B77-1901	Rotor
6	B76-9601	Bail kick lever
17	B77-2301	Bail
21	B77-1801	Body
39	B77-1002	Body cover
41	B77-2501	Handle