Daiwa
COMMITTED TO TOTAL QUALITY

SPINNING REEL AG2600C/4000C

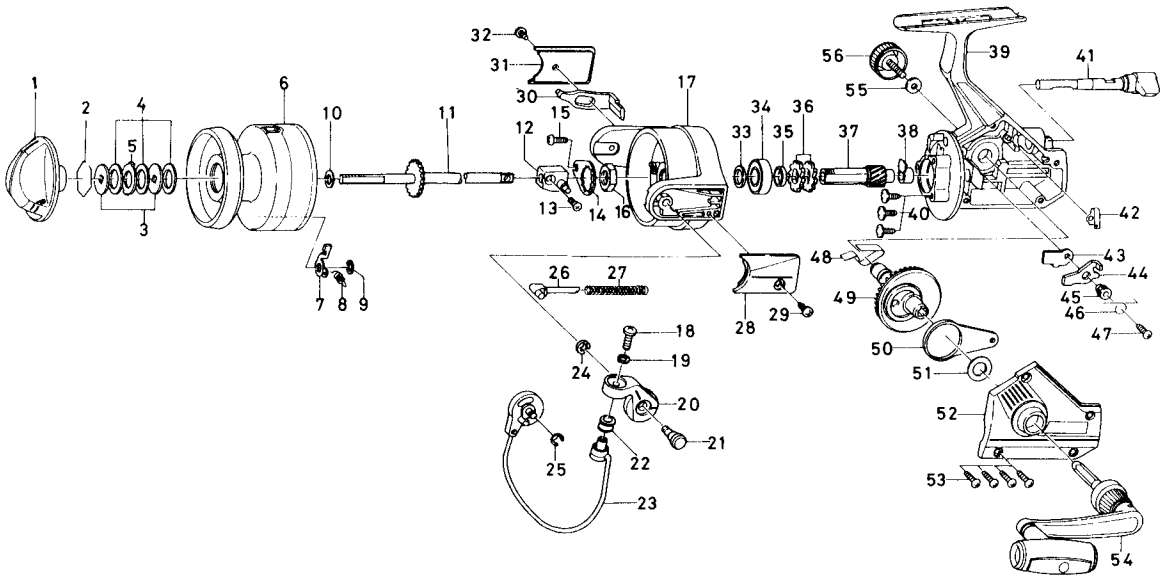

Key No.	Parts No.	Parts Name
1	K12-3902	Drag knob
2	171-7701	Drag washer retainer
3	K06-7901	Key washer
4	375-7802	Drag washer
5	B89-9501	Eared washer
6	K06-7401	Spool assembly
7	B07-8201	Click pawl
8	145-2101	Click spring
9	320-1402	Click retainer
10	374-9002	Spool washer
11	K06-6801	Main shaft assembly
12	K12-1901	Oscillating slider
13	352-0901	Oscillating slider screw
14	B02-1601	Rotor nut holding plate
15	L01-1702	Rotor nut holding plate screw
16	340-8301	Rotor nut
17	K12-5101	Rotor
18	353-9702	Line roller screw
19	160-8101	Lock washer
20	K06-6701	Bail arm
21	K12-0401	Bail arm screw
22	250-4221	Line roller
23	K06-6301	Bail
24	320-1402	Bail arm screw retainer
25	320-1402	Bail trip cam screw retainer
26	K12-0601	Bail spring shaft
27	K12-0701	Bail spring
28	K12-0802	Bail spring cover
29	K07-1501	Bail spring cover screw
30	K11-9801	Bail trip lever
31	K11-9902	Bail trip cover
32	K07-1501	Bail trip cover screw

Key No.	Parts No.	Parts Name
33	371-2827	Bearing washer
34	K03-3601	Ball bearing
35	K11-9501	Spacing sleeve
36	K11-9401	Anti-reverse ratchet
37	K11-9301	Pinion gear
38	K11-9201	Pinion holder
39	K06-6201	Body assembly
40	B84-2102	Bearing retainer screw
41	K11-9001	Anti-reverse lever
42	B58-8601	Anti-reverse cam spring
43	K11-8601	Anti-reverse pawl plate
44	K11-8701	Anti-reverse pawl
45	K11-8801	Anti-reverse pawl collar
46	K11-8901	Anti-reverse pawl spring A
47	K08-7802	Anti-reverse pawl screw
48	K12-1301	Anti-reverse pawl spring B
49	K11-5801	Drive gear
50	K12-1801	Oscillating support
51	371-2800	Drive gear washer
52	K06-8101	Side cover
53	K08-7801	Side cover screw
54	K06-8001	Handle assembly
55	L02-2301	Handle lock washer
56	L00-9102	Handle lock screw
AG4000C Special Parts		
6	K06-7501	Spool assembly
17	K11-9701	Rotor
23	K06-6401	Bail
39	K06-6202	Body assembly
52	K06-8102	Side cover