Daiwa
COMMITTED TO TOTAL QUALITY

# SPINNING REEL AG1655B/2055B

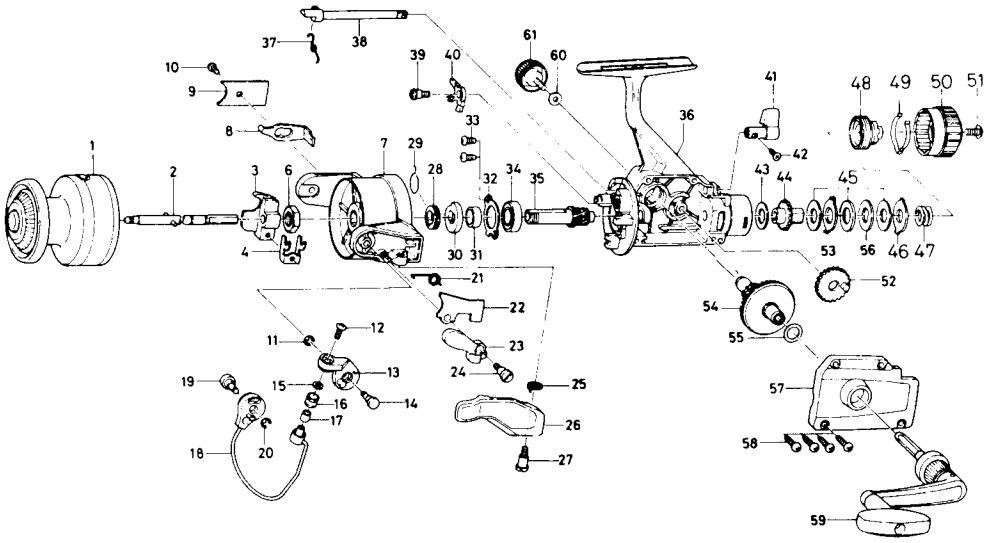


| Key No. | Parts No. | Parts Name |
|---|---|---|
| 1 | K10-8502 | Spool |
| 2 | B83-9801 | Main shaft |
| 3 | E08-7801 | Oscillating slider |
| 4 | B93-7202 | Oscillating slider retainer |
| 6 | B10-5701 | Rotor nut |
| 7 | B82-1901 | Rotor |
| 8 | B83-6701 | Bail trip lever |
| 9 | B76-9701 | Bail trip cover |
| 10 | B83-4402 | Bail trip cover screw |
| 11 | 320-5901 | Bail arm screw retainer |
| 12 | B67-9302 | Line roller screw |
| 13 | B67-4601 | Bail arm |
| 14 | B83-3801 | Bail arm screw |
| 15 | B55-4301 | Line roller washer A |
| 16 | 250-3921 | Line roller |
| 17 | B45-1501 | Line roller bushing |
| 18 | K10-7702 | Bail |
| 19 | B83-4202 | Bail trip cam screw |
| 20 | 320-5901 | Bail trip cam screw retainer |
| 21 | K04-9901 | Bail spring |
| 22 | B83-6402 | Bail spring cover |
| 23 | B76-9301 | Trigger plate |
| 24 | K03-7302 | Bail spring cover screw |
| 25 | B67-5201 | Trigger spring |
| 26 | B67-5105 | Trigger lever |
| 27 | K03-7302 | Trigger screw |
| 28 | B68-6401 | Spring holder |
| 29 | 145-0902 | Anti-reverse pawl spring |
| 30 | B67-4301 | Anti-reverse ratchet |
| 31 | K03-1701 | Spacing sleeve |
| 32 | B35-6301 | Bearing retainer |
| 33 | B83-4402 | Bearing retainer screw |
| 34 | B54-6001 | Ball bearing |
| 35 | K10-5502 | Pinion gear |
| 36 | K04-9101 | Body |

| Key No. | Parts No. | Parts Name |
|---|---|---|
| 37 | 144-0321 | Anti-reverse cam spring |
| 38 | B83-6001 | Anti-reverse cam |
| 39 | K03-2901 | Anti-reverse pawl screw |
| 40 | K02-3301 | Anti-reverse pawl |
| 41 | E08-6101 | Anti-reverse lever |
| 42 | B12-8201 | Anti-reverse lever screw |
| 43 | B46-9505 | Drag washer A |
| 44 | B76-9803 | Click gear |
| 45 | E14-3301 | Drag washer B |
| 46 | B83-9501 | Eared washer A |
| 47 | K02-6701 | Drag coil spring |
| 48 | B77-0004 | Drag screw |
| 49 | B77-0301 | Drag washer spring |
| 50 | K05-0201 | Drag knob |
| 51 | 352-1107 | Drag knob spring screw |
| 52 | B74-3701 | Oscillating gear |
| 53 | K05-0301 | Eared washer B |
| 54 | K10-5601 | Drive gear |
| 55 | 373-7800 | Drive gear washer |
| 56 | E02-4401 | key washer |
| 57 | K04-9401 | Side cover |
| 58 | B83-5002 | Side cover screw |
| 59 | E00-2502 | Handle |
| 60 | B92-4902 | Handle lock washer |
| 61 | B92-5001 | Handle lock screw |

AG2055B **Special Parts**

| | | |
|---|---|---|
| 1 | K10-8602 | Spool |
| 7 | B82-2101 | Rotor |
| 8 | B83-7301 | Bail trip lever |
| 18 | K10-7902 | Bail |
| 36 | K04-9103 | Body |
| 57 | K04-9404 | Side cover |
| 59 | E00-2802 | Handle |