For parts and service
call toll free: 1-888-404-1119
www.mikesreelrepair.com

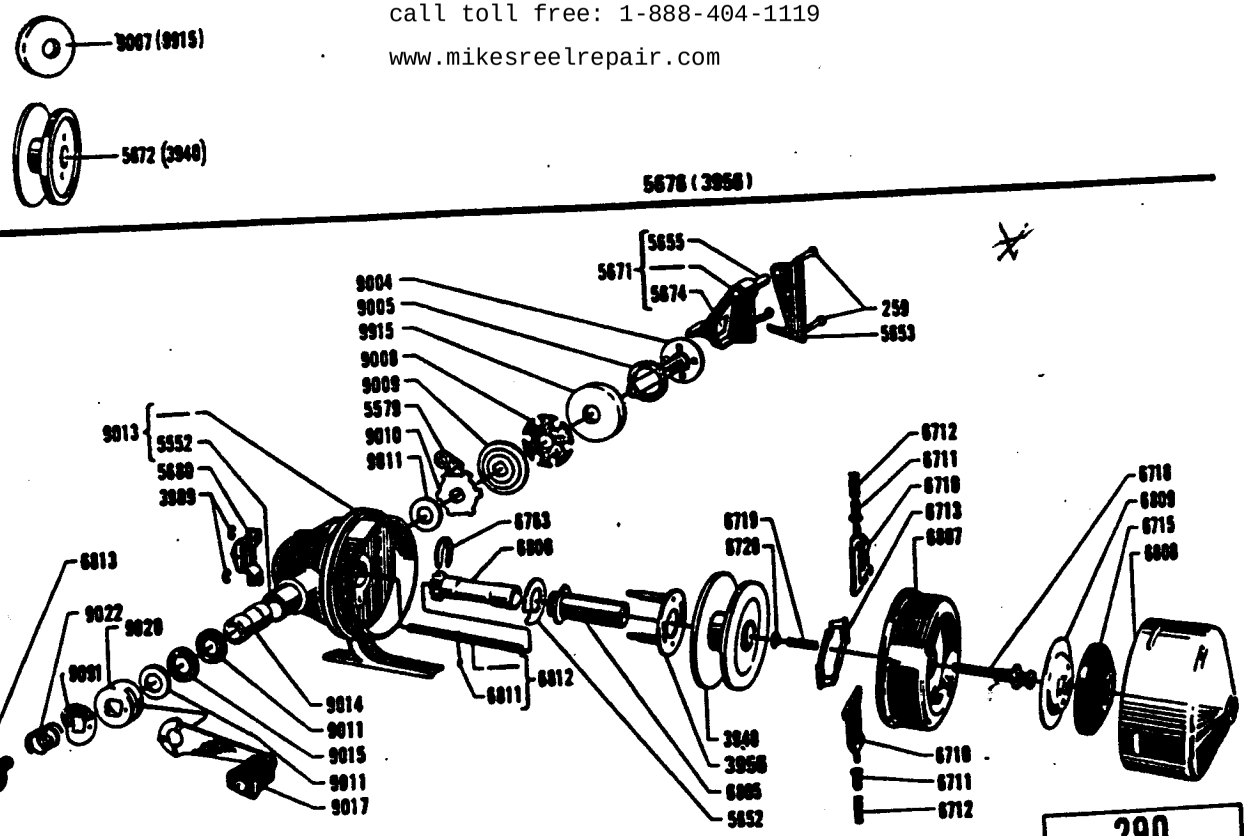

For parts and service
call toll free: 1-888-404-1119
www.mikesreelrepair.com