For parts and service
call toll free: 1-888-404-1119
www.mikesreelrepair.com

8000 C

79 09 00

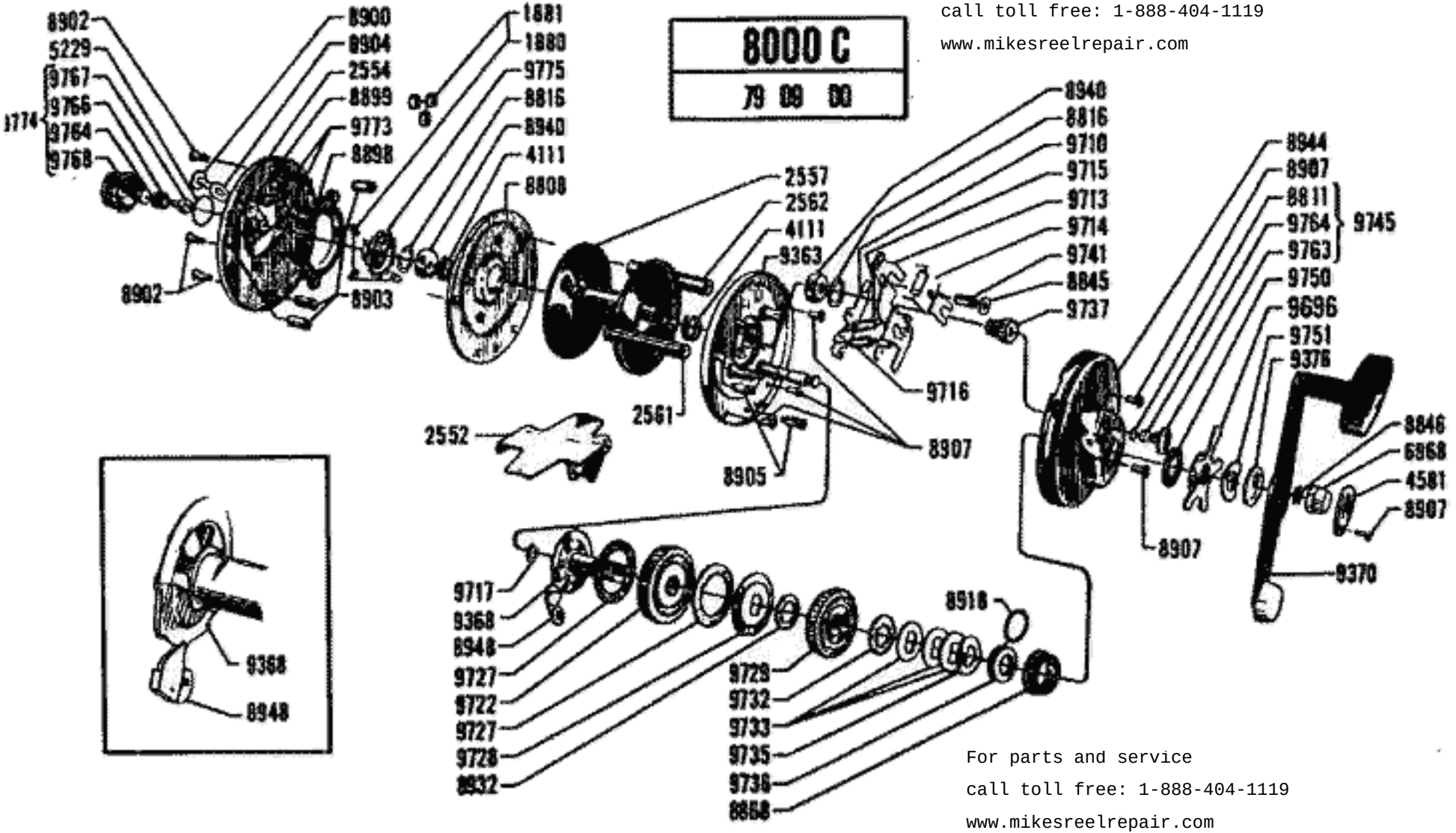

For parts and service
call toll free: 1-888-404-1119
www.mikesreelrepair.com