Ambassadeur 6500-C3 2-Speed

901387-901497

34-11636-0

For parts and service
call toll free: 1-888-404-1119
www.mikesreelrepair.com

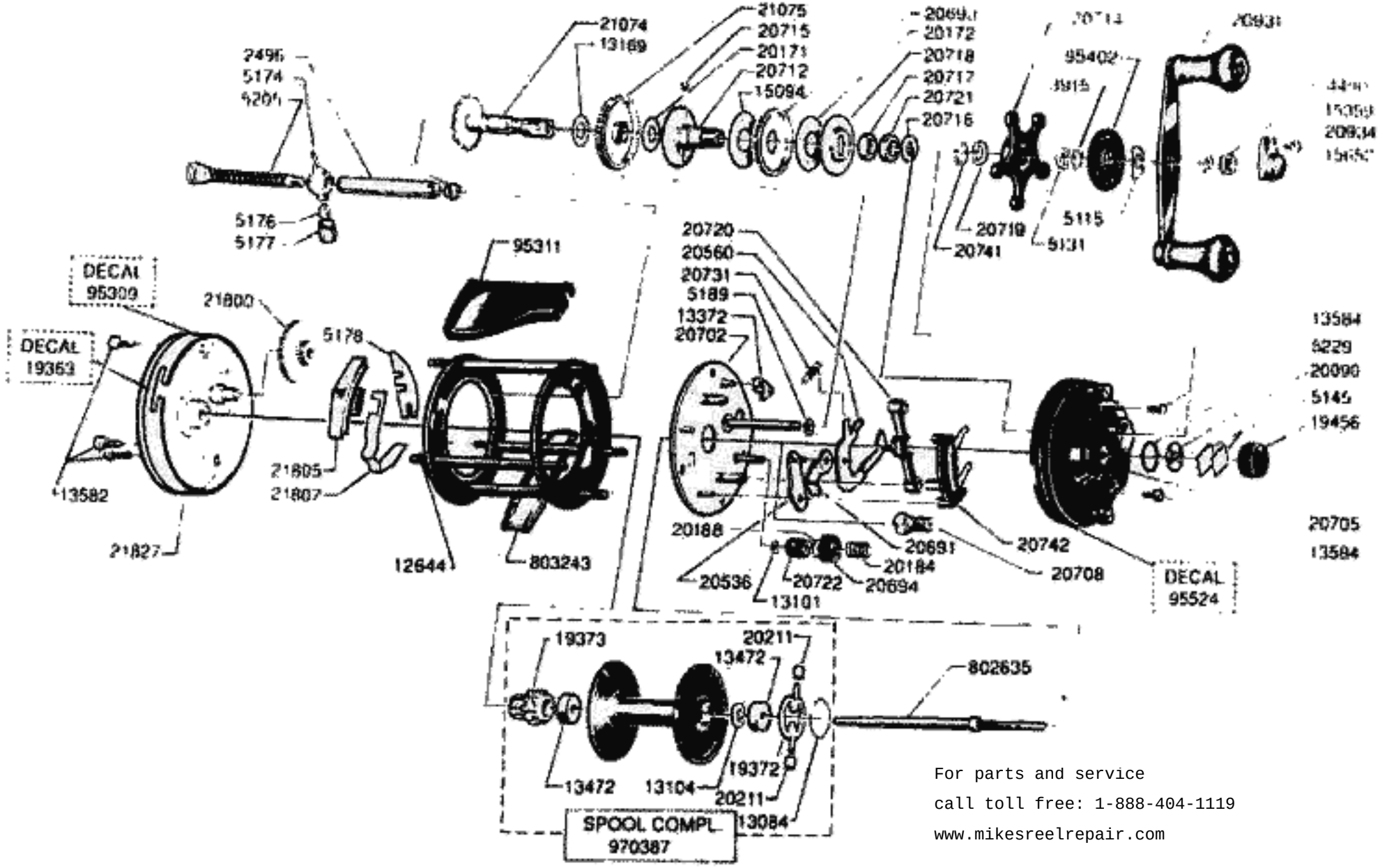

For parts and service
call toll free: 1-888-404-1119
www.mikesreelrepair.com