8748 (8703)

For parts and service
call toll free: 1-888-404-1119
www.mikesreelrepair.com

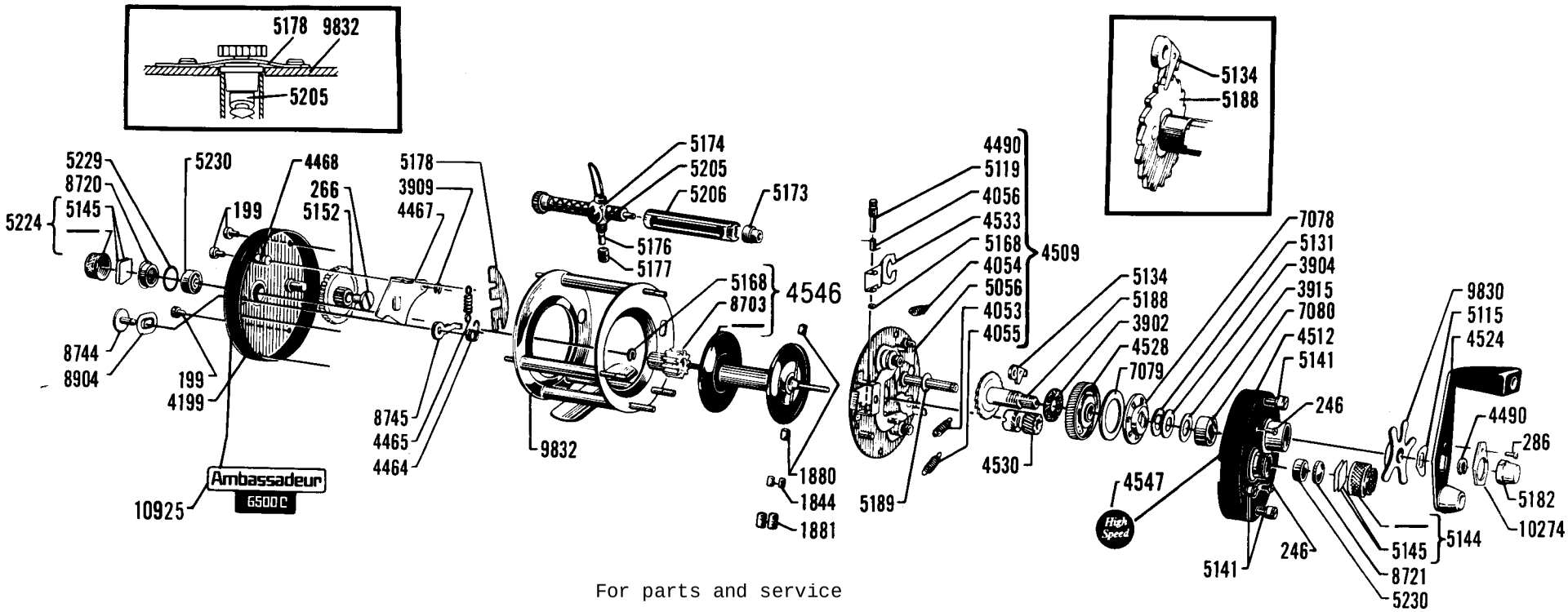

For parts and service
call toll free: 1-888-404-1119
www.mikesreelrepair.com

Ambassadeur **6500 C**