For parts and service
call toll free: 1-888-404-1119
www.mikesreelrepair.com

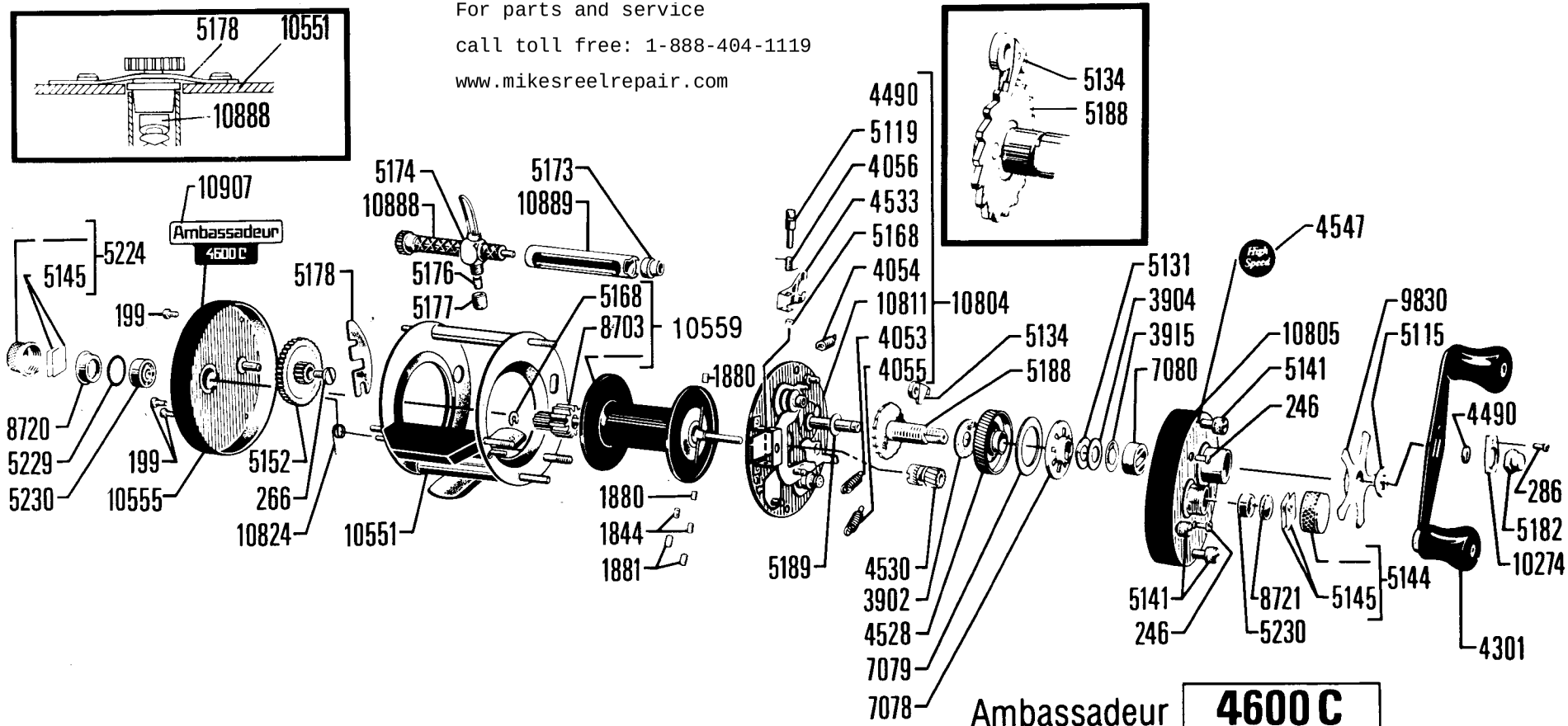


Ambassadeur **4600 C**

For parts and service
call toll free: 1-888-404-1119
www.mikesreelrepair.com