# PARTS LIST FOR MODELS 750SSM AND 850SSM

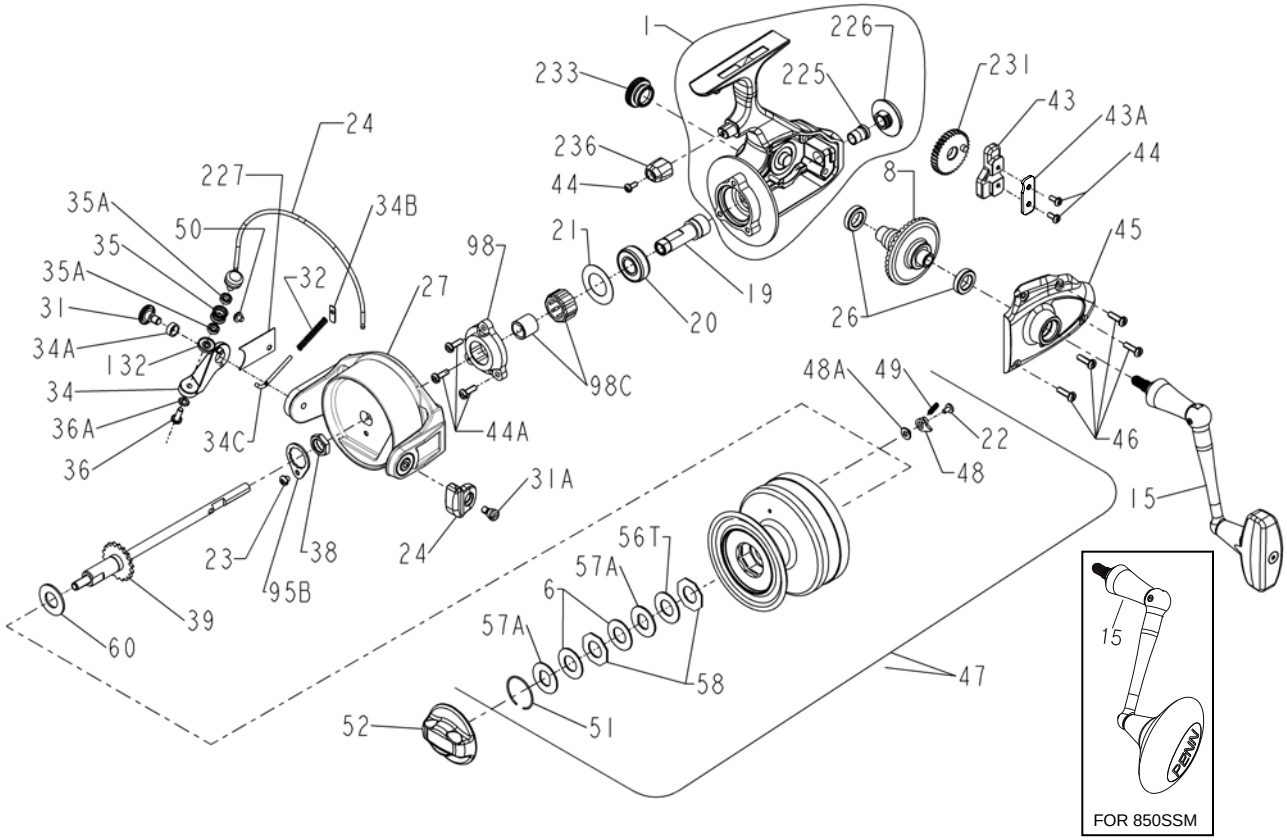


| KEY NO. | PART NO. | DESCRIPTION |
|---|---|---|
| 1 | 001 750M | Housing Assembly |
| | 001 850M | Housing Assembly |
| 6 | 006 060 | Drag Washer HT-100 (2 req.) |
| 8 | 008P7500 | Main Gear |
| 15 | 015N750M | Handle Assembly (750SSM) |
| | 015N950M | Handle Assembly (850SSM) |
| 19 | 019 750M | Pinion |
| 20 | 020 704 | Ball Bearing |
| 21 | 021 750M | Bearing Cover |
| 22 | 048B750M | Spool Click Screw |
| 23 | 023 750 | Locking Plate Screw |
| 24 | 024 750MC | Bail Wire Assembly |
| | 024 850M | Bail Wire Assembly |
| 26 | 026A2.5FR | Ball Bearing (2 req.) |
| 27 | 027 750M | Rotor |
| | 027 850M | Rotor |
| 31 | 031 750M | Bail Arm Screw |
| 31A | 031A550G | Bail Cam Screw |
| 32 | 032 750M | Bail Spring |
| 34 | 034 750M | Bail Arm |
| 34A | 034A750 | Bail Arm Bushing |
| 34B | 034B750M | Pivot Plate |
| 34C | 034C750M | Pivot Arm |
| 35 | 035 750M | Line Roller |
| 35A | 035A8500J | Ball Bearing (2 req.) |
| 36 | 036 750 | Bail Stud Screw |
| 36A | 036A750 | Lock Washer |
| 38 | 038 710 | Rotor Nut |
| 39 | 039 750M | Spool Shaft |
| 43 | 043 750M | Crosswind Block |
| 43A | 043A750 | Crosswind Block Plate |
| 44 | 044 750 | Screw (3 req.) |
| 44A | 044 710 | Screw (3 req.) |
| 45 | 045 750M | Housing Cover |
| | 045 850M | Housing Cover |
| 46 | 046 750 | Cover Screw (4 req.) |
| 47 | 047 750M | Spool Assembly |
| | 047 850M | Spool Assembly |
| 48 | 048 750 | Click Tongue |
| 48A | 048A750 | Click Tongue Washer |
| 49 | 049 710 | Click Tongue Spring |
| 51 | 051 704 | Retaining Ring |
| 50 | 050 712 | Screw |
| 52 | 052 750 | Drag Knob Assembly |
| 56T | 056T704 | Drag Washer, Teflon |
| 57A | 057A750 | Drag Washer, Keyed (2 req.) |
| 58 | 058 704 | Drag Washer Octagon. (2 req.) |
| 60 | 060 750M | Thrust Washer |
| 95B | 095B070 | Locking Plate |
| 98 | 098 750M | Clutch Housing |
| 98C | 098C750M | Clutch Bearing and Sleeve |
| 132 | 132 750M | Bail Washer |
| 225 | 225 750 | Spool Shaft Bushing |
| 226 | 226 750M | Rear Cap |
| 227 | 227 750M | Bail Spring Cover |
| 231 | 231 750M | Crosswind Gear |
| 233 | 233 550G | Bearing Cover |
| 236 | 236 750M | Trip Bumper |