COOLERS

5254D
5255D
5256D

SteelBelted® Coolers

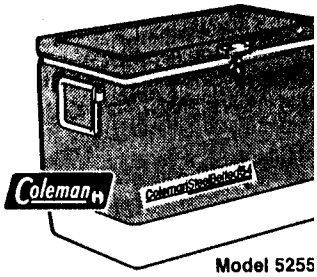

Model 5255

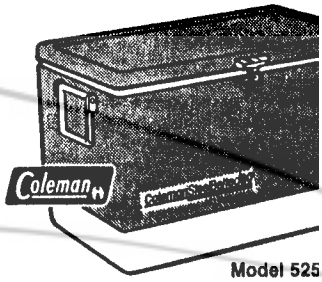

Model 525

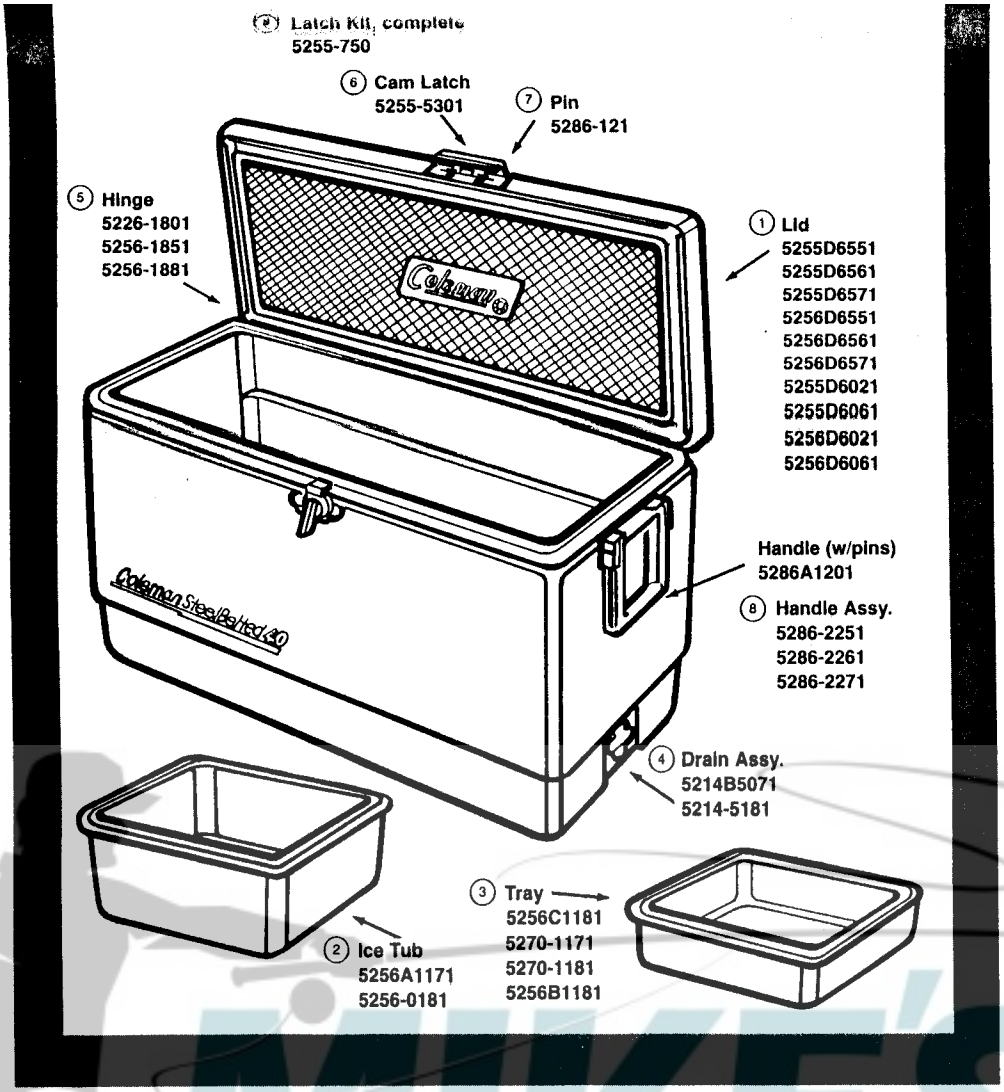

Model	Color					Dimensions	Capacity
	700	703	705	706	707		
5254D	Green	Red	Burgundy	Blue	Platinum	24" x 15" x 12½"	40 Qts.
5255D	Green	Red	Burgundy	Blue	Platinum	24" x 15" x 15½"	54 Qts.
5256D	Green	Red	Burgundy	Blue	Platinum	29½" x 17" x 15½"	80 Qts.

①	**5255D6551**	Lid, Burgundy	5254D, 5255D
	5255D6561	Lid, Blue	5254D, 5255D
	5255D6571	Lid, Platinum	5254D, 5255D
	5256D6551	Lid, Burgundy	5256D
	5256D6561	Lid, Blue	5256D
	5256D6571	Lid, Platinum	5256D
	5255D6021	Lid, Green	5254D, 5255D
	5255D6061	Lid, Red	5254D, 5255D
	5256D6021	Lid, Green	5256D
	5256D6061	Lid, Red	5256D
②	**5256A1171**	Ice Tub, White	5256D
	5256-0181	Ice Tub, Grey	5256D
③	**5256C1181**	Ice Tray, Grey	5256D
	5256B1181	Ice Tray, White	5256D
	5270-1171	Ice Tray, White	5254D, 5255D
	5270-1181	Ice Tray, Grey	5254D, 5255D
④	**5214B5071**	Drain Assy., White	5254D, 5255D, 5256D
	5214-5181	Drain Assy., Grey	5254D, 5255D, 5256D
⑤	**5226-180**	Hinge	5254D, 5255D, 5256D
	5256-1851	Hinge, White	5256D
	5256-1881	Hinge, Grey	5256D
⑥	**5255-5301**	Cam Latch	5254D, 5255D, 5256D
⑦	**5286-121**	Pin	5254D, 5255D, 5256D
⑧	**5286A1201**	Handle, White (w/pins)	5254D, 5255D, 5256D
	5286-2251	Handle Assy., Burgundy	5254D, 5255D, 5256D
	5286-2261	Handle Assy., Lt. Blue	5254D, 5255D, 5256D
	5286-2271	Handle Assy., Charcoal	5254D, 5255D, 5256D
⑨	**5255-750**	Latch Kit, complete	5254D, 5255D, 5256D

MIKE'S REEL REPAIR