21 BOW BLACK

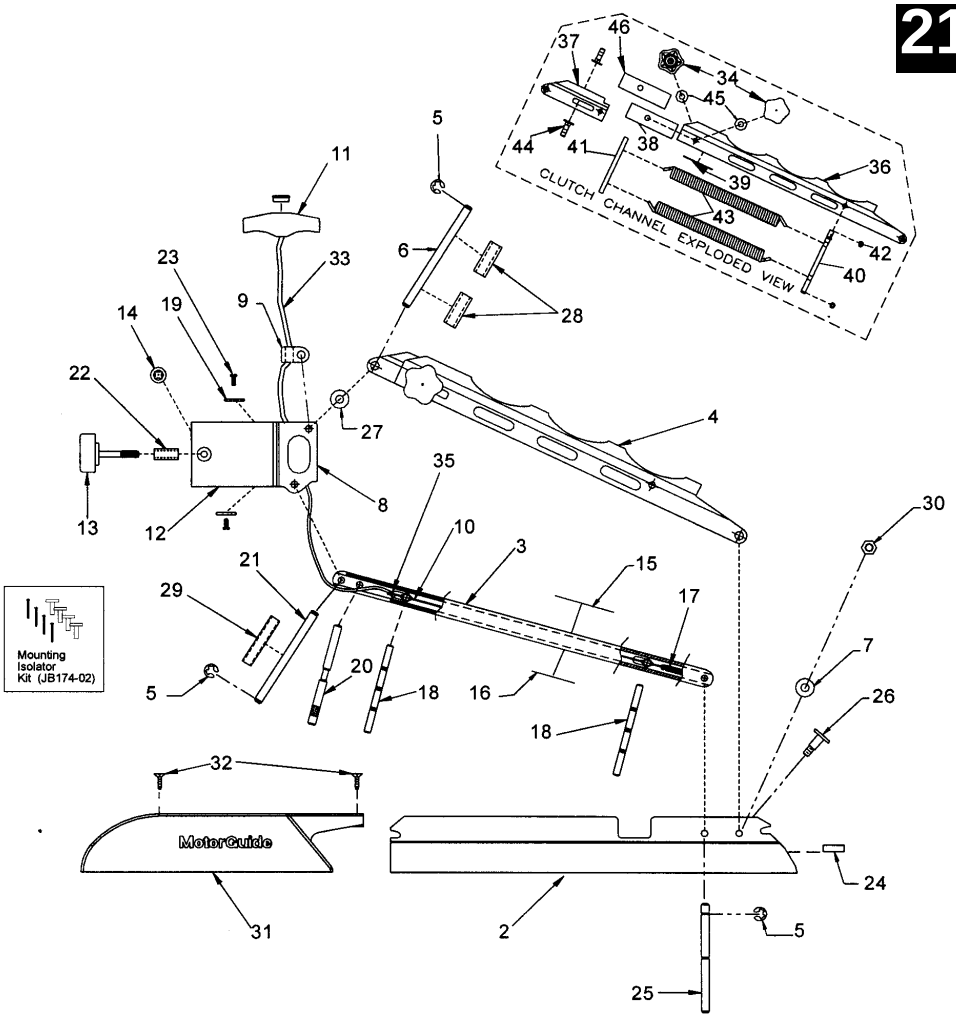

ITEM #	PART #	DESCRIPTION	ITEM #	PART #	DESCRIPTION
1	RK300-30	ASSEMBLY - 21 MOUNT	24	AK016-01	RUBBER REST
2	RK010-33	DECK CHANNEL	25	RK107-02	PIN, BOW ARM/DECK CHANNEL
3	RK309-16	BOW ARM	26	RK134-01 (2)	BOLT - SHOULDER
4	RK3308-10	TOP CHANNEL CLUTCH ASSY	27	RK171-02 (2)	WASHER, NYLON .062” THICK
5	BK046-01 (5)	E-RING, 3/8"	28	RK172-03	1.625” ROPE BUSHING SPACERS
6	RK102-01	PIN, BRACKET/CLUTCH CHANNEL	29	RK172-04	2.625 ROPE BUSHING SPACERS
7	RK171-01 (2)	WASHER, NYLON .125" THK.	30	KM098-01 (2)	LOCK NUT - 5/16-24
8	RK011-04	BRACKET	31	RK034-05	DECKET
9	RK021-01	ROPE BUSHING, NYLON	32	XT137-01 (4)	SCREW, DECKET
10	RK013-02	LOCK SLIDE ASSEMBLY	33	AK043-01	ROPE
11	AK072-01	ROPE HANDLE WITH BUTTON	34	RK082-04	CLUTCH KNOB
12	RK012-04	DOOR, BRACKET	35	RK021-04	BUSHING, ROPE
13	RK082-05	KNOB, BAR	36	RK308-11	TOP CHANNEL
14	RK171-06	WASHER, NYLON	37	RK361-04	CLUTCH CHANNEL
15	AK056-01	LABEL, WARNING	38	RK100-06	FRICTION PAD STARBOARD
16	BK056-01	LABEL, PROP WARNING	39	RK100-07	CLUTCH PAD
17	RK014-01	SPRING	40	RK102-02	PIN, LONG
18	RK106-03	PIN, LOCK SLIDE21 MOUNT	41	RK102-03	PIN, SHORT
19	RK171-07 (2)	WASHER, NYLON	42	RK046-01	RETAINING RING
20	RK108-01	PIN, TENSION	43	RK014-03	CLUTCH SPRING
21	RK107-07	PIN, BRACKET/BOW ARM	44	RK025-04	CLUTCH BOLT
22	RK021-05	DOOR KNOB BUSHING	45	XT011-01	CLUTCH WASHER
23	RT133-03	#10-32 X 1/2 SCREW	46	RK100-06	FRICTION PAD PORT

FEATURES

- Built-in breakaway clutch with return springs
- Hinged door for easy removal
- Positive “Lock in Stow”
- Adjustable Height

CONSTRUCTION

- Heavy-duty extruded aluminum

ENVIRONMENT

- FRESHWATER

BASE DIMENSIONS
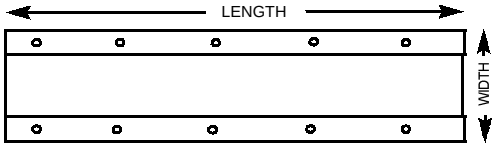
- Length - 23 1/4”
- Width - 5”
- Mounting hole size - 1/4”
- Length fully stowed - 43 1/4”