PARTS LIST FOR MODELS 114H2, 114H2LW, AND 114H2SP

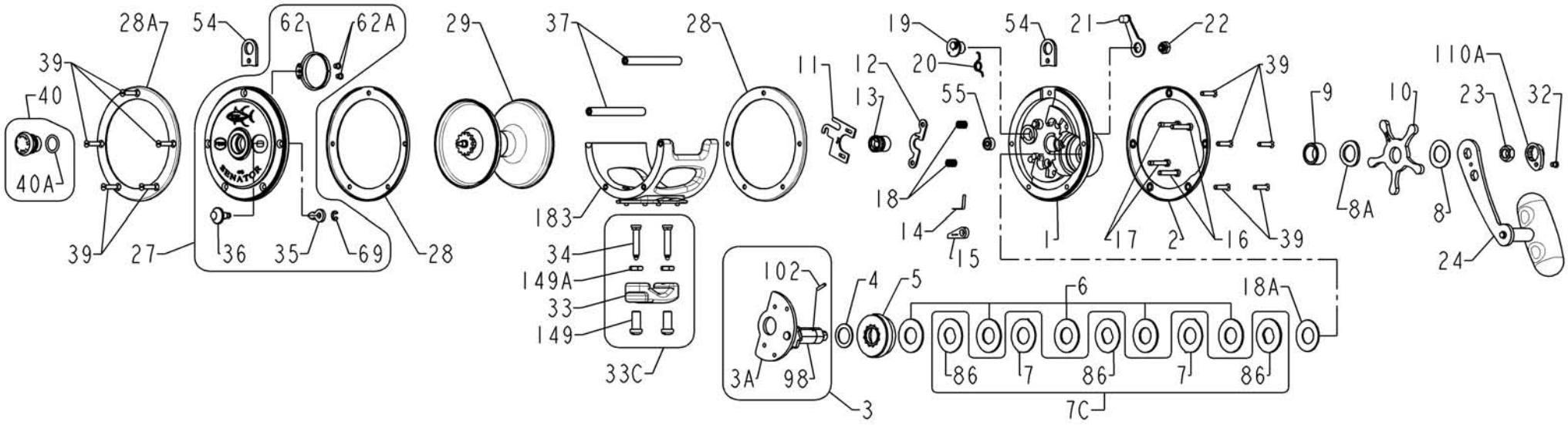

KEY NO.	114H2 PART NO.	114H2LW PART NO.	114H2SP PART NO.	DESCRIPTION
1	1197483	1197483	1197483	1-114H2 Right Side Plate
2	1180666	1180666	1180666	2N-114H Outer Right Side Ring
3	1197499	1197499	1197499	3-114H2 Bridge Assembly
3A	1197500	1197500	1197500	3-114H-1 Bridge Sub-Assembly
4	1180766	1180766	1180766	4-115 Fiber Washer
5	1180848	1180848	1180848	5-115 Main Gear
6	1180911	1180911	1180911	6-115 Drag Washer (5 req.)
7	1181011	1181011	1181011	7-115 Metal Ear Drag Washer (2 req.)
7C	1181044	1181044	1181044	7C-115 Drag Washer Set
8	1181067	1181067	1181067	8-114 Tension Spring
8A	1181068	1181068	1181068	8-115 Tension Spring
9	1181153	1181153	1181153	9-114H Spacing Sleeve
10	1181185	1181185	1181185	10-114 Star Drag Wheel
11	1181234	1181234	1181234	11-114 Eccentric Jack
12	1181262	1181262	1181262	12-114 Pinion Yoke
13	1181322	1181322	1181322	13-114H Pinion
14	1181395	1181395	1181395	14-114 Dog Spring
15	1181438	1181438	1181438	15-114H Dog
16	1181572	1181572	1181572	16-114 Lower Bridge Screw (2 req.)
17	1181596	1181596	1181596	17-114 Upper Bridge Screw (2 req.)
18	1181618	1181618	1181618	18-114 Clutch Spring (2 req.)
18A	1181619	1181619	1181619	18-114H Disc Spring
19	1181664	1181664	1181664	19-114 Eccentric
20	1181766	1181766	1181766	20-114 Eccentric Spring
21	1181845	1181845	1181845	21-114 Eccentric Lever
22	1197514	1197514	1197514	22-114H2 Eccentric Screw
23	1197515	1197515	1197515	23-114H2 Handle Nut
24	1197519	1197519	1197519	24-114H2 Handle Assembly

KEY NO.	114H2 PART NO.	114H2LW PART NO.	114H2SP PART NO.	DESCRIPTION
27	1197523	1197523	1197523	27-114H2 Left Side Plate
28	1197490	1197490	1197490	2-114H2i Inner Side Ring (2 req.)
28A	1180665	1180665	1180665	2N-114 Outer Left Side Ring
29	1191518	1191520	1191519	29-114H2, H2W, H2SP Spool
32	1182708	1182708	1182708	32-15 Handle Nut Cap Screw
33	1197532	1197532	1197532	33-114H2 Rod Clamp
33C	1197534	1197534	1197534	33C-114H2 Rod Clamp Kit
*	*1182783	*1182783	*1182783	*33R-200 Ringed Clamp (Opt)
34	1182786	1182786	1182786	34-16VS Clamp Screw (2 req.)
35	1182915	1182915	1182915	35-114 Click Tongue
36	1182991	1182991	1182991	36-114H Click Button
37	1191722	1197539	1191722	37M-114, 37-114H2W Frm Post (2 req.)
39	1183184	1183184	1183184	39-12 Side Plate Screw (10 req.)
40	1191766	1191766	1191766	40-114H2 Left Side Bearing Assembly
40A	1184523	1184523	1184523	120-114H Left Side Bearing O-Ring
54	1183857	1183857	1183857	54-114 Harness Lug (2 req.)
55	1183882	1183882	1183882	55-116 Right Side Bearing
62	1197546	1197546	1197546	62-114H2 Click Spring
62A	1182662	1182662	1182662	31-25FR Click Spring Screw (2 req.)
69	1184129	1184129	1184129	69B-600 Retaining Ring
86	1184255	1184255	1184255	86-115L Keyed Washer (3 req.)
98	1198891	1198891	1198891	98-114H2 Gear Sleeve
102	1192231	1192231	1192231	102-114 Gear Sleeve Pin
110A	1198893	1198893	1198893	110A-114H2 Handle Nut Cap
149	1184702	1184702	1184702	149-45 Clamp Nut (2 req.)
149A	1184706	1184706	1184706	149-200 Hex Nut (2 req.)
183	1198901	1198903	1198902	183-114H2, H2W, H2SP Frame Asm.

*Not Shown