SHIMANO

VANFORD

VFC2000HGA

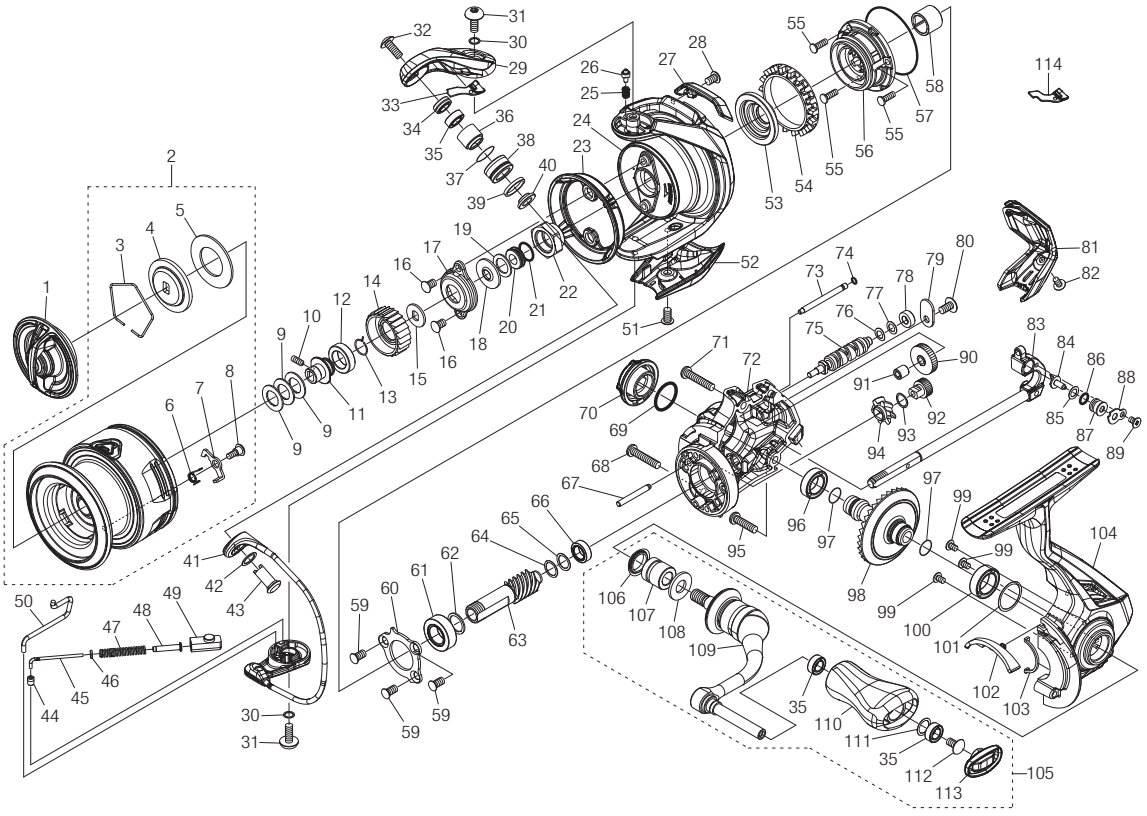

(51SF823D24X)

Please note that the number of adjusting washers may not be the same as shown in the exploded views.
(Adjustment will vary with each individual product.)

#	Part No.	Description	#	Part No.	Description	#	Part No.	Description
1	146GQ	Drag Knob Assembly	43	10TPC	Line Roller Support	85	10K9C	Washer
2	146GK	Spool Assembly	44	142QB	Bail Spring Guide A Bushing	86	100WX	O Ring
3	10B6L	Retainer	45	142Q8	Bail Spring Guide A	87	1009L	Oscillating Slider Bushing
4	13K0V	Key Washer	46	142Q7	Spring Guide A Support Collar	88	144RR	Oscillating Pawl Cover
5	142LH	Drag Washer A	47	142Q9	Bail Spring	89	1055H	Screw
6	10BQF	Drag Click Spring	48	142PV	Bail Spring Guide C	90	10DK0	Idle Gear
7	102H5	Drag Click	49	144RE	Bail Spring Guide B	91	1009C	Bushing
8	10A6F	Screw	50	146HF	Bail Trip Lever	92	10DK2	Idle Gear (Small)
9	10BU9	Spool Washer	51	10SH9	Screw	93	10SYU	Washer
10	10PN3	Set Screw	52	146GW	Bail Hold Support Guard	94	144RY	Idle Gear (Large)
11	10THY	Spool Bearing Bushing	53	101D5	Rotor Ring	95	10M2L	Screw
12	10J3F	Bushing	54	10QXQ	Friction Ring	96	107FA	Ball Bearing
13	107V2	Ratchet Spring	55	100WT	Screw	97	1009S	O Ring
14	10SYS	Drag Click Ratchet	56	10S2L	Roller Clutch Assembly	98	142PT	Drive Gear
15	103PE	Spool Support A	57	1009Z	O Ring	99	10SH0	Screw
16	103GW	Screw	58	1009Y	Roller Clutch Inner	100	10EX6	Ball Bearing
17	1076N	Nut Lock Plate	59	100WY	Screw	101	101AY	Washer
18	1017W	Bearing Water Proof	60	10DWD	Bearing Retainer	102	1017Y	Bail Trip Strike
19	100RU	Washer	61	10DZB	Ball Bearing	103	1009W	Flange Water Proof
20	10RDL	Main Shaft Collar	62	143G5	Washer	104	1480V	Side Cover Assembly
21	10DXE	O Ring	63	144RX	Pinion Gear	105	146H5	Handle Assembly
22	1427D	Rotor Nut	64	10HE5	Washer	106	10PXV	Handle Shaft Seal
23	146GZ	Rotor Brim	65	10TBA	Washer	107	10DZE	Handle Shaft Cover B
24	1480Q	Rotor Assembly	66	104JZ	Ball Bearing	108	100RR	Handle Washer
25	13ZAA	Click Spring	67	144RJ	Idle Gear Shaft	109	1480X	Handle Shank Assembly
26	106ZC	Click Pin	68	10TND	Screw	110	14285	Handle Knob
27	146GY	Counter Weight Cover	69	10E3K	O Ring	111	104FH	Washer
28	10RNG	Screw	70	144RK	Handle Screw Cap	112	10LFA	Screw
29	1451C	Bail Arm	71	146AR	Screw	113	14286	Handle Knob Seal
30	10K96	Washer	72	1451E	Body			
31	10RFW	Screw	73	144RM	Oscillating Guide			
32	10TLJ	Screw	74	100BH	O Ring			
33	13ZA9	Bail Arm Fin	75	144RN	Worm Shaft			
34	10E44	Collar	76	10ECK	Washer			
35	104VX	Ball Bearing	77	10K98	Washer			
36	1009K	Bushing	78	144RP	Bushing			
37	1009E	O Ring	79	10S7C	Worm Shaft Retainer			
38	1009A	Line Roller	80	10QG5	Screw			
39	10RFZ	Spacer	81	1451F	Rear Protector			
40	10TJM	Bearing Spacer	82	10RX2	Screw			
41	1480R	Bail Assembly	83	143RE	Main Shaft Assembly			
42	1018Z	Washer	84	1018D	Oscillating Pawl	114	13ZAB	Bail Arm Fin (accessory)