SHIMANO

STRADIC S A-RB

ST-6000FJ

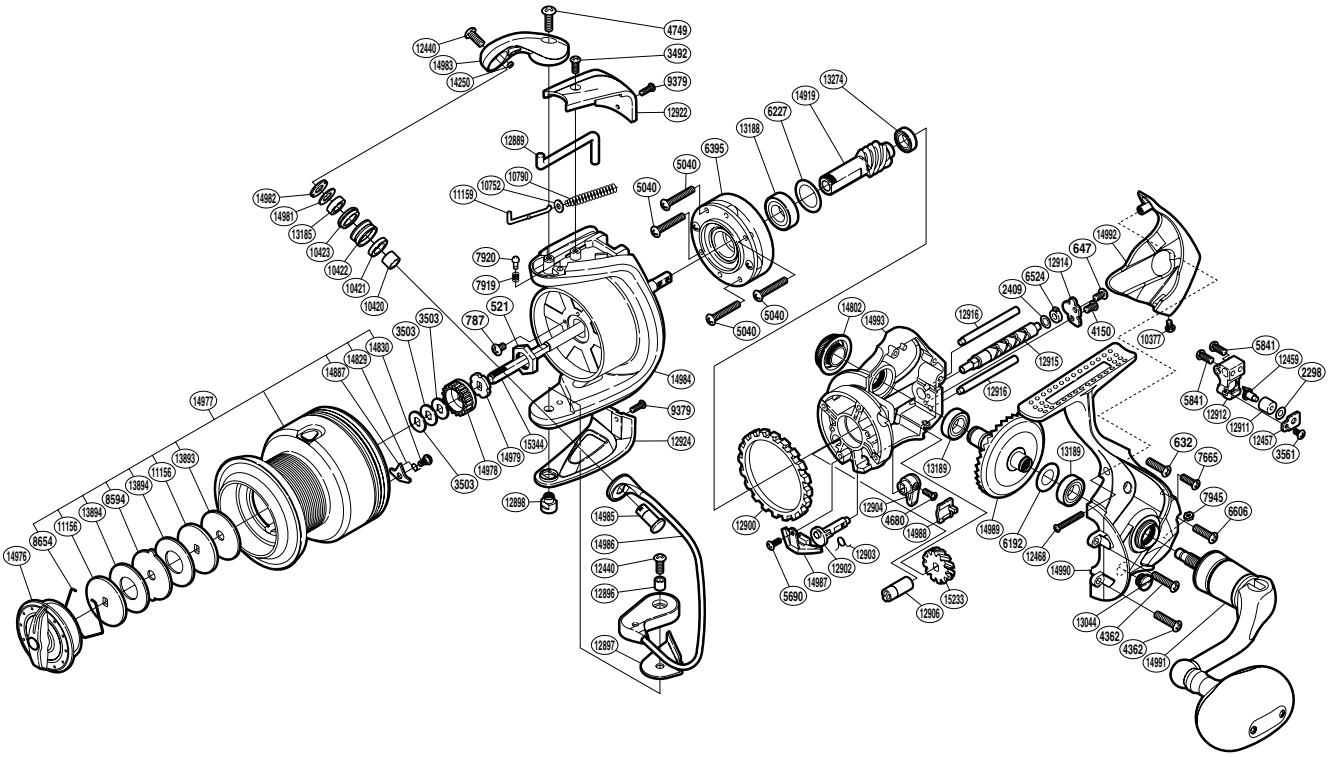

(51SE456010U)

Please note that the number of adjusting washers may not be the same as shown in the exploded views. (Adjustment will vary with each individual product.)

Part No.	Description	Part No.	Description	Part No.	Description
RD 0521	Rotor Nut	RD10421	Line Roller Collar	RD13189	Ball Bearing
RD 0632	Screw	RD10422	Line Roller	RD13274	Ball Bearing
RD 0647	Screw	RD10423	Line Roller Bushing	RD13893	Drag Washer
RD 0787	Screw	RD10752	Spring Guide A Support	RD13894	Drag Washer
RD 2298	Spacer	RD10790	Bail Spring	RD14250	Line Roller Oil Cap
RD 2409	Spacer	RD11156	Key Washer	RD14802	Handle Screw Cap
RD 3492	Screw	RD11159	Bail Spring Guide A	RD14829	Drag Click Spring
RD 3503	Spool Washer	RD12440	Screw	RD14830	Screw
RD 3561	Screw	RD12457	Oscillating Pawl Cover	RD14887	Drag Click
RD 4150	Screw	RD12459	Oscillating Pawl	RD14919	Pinion Gear
RD 4362	Screw	RD12468	Screw	RD14976	Drag Knob
RD 4680	Screw	RD12889	Bail Trip Lever	RD14977	Spool Assembly
RD 4749	Screw	RD12896	Screw Collar	RD14978	Spool Support A
RD 5040	Screw	RD12897	Bail Hold Support Spacer	RD14979	Spool Support B
RD 5690	Screw	RD12898	Bail Hold Support Shaft	RD14981	Line Roller Washer
RD 5841	Screw	RD12900	Friction Ring	RD14982	Line Roller Plate
RD 6192	Washer	RD12902	Anti-Reverse Cam	RD14983	Bail Arm
RD 6227	Washer	RD12903	Anti-Reverse Cam Spring	RD14984	Rotor
RD 6395	Roller Clutch Assembly	RD12904	Anti-Reverse Lever	RD14985	Line Roller Support
RD 6524	Worm Bushing (rear)	RD12906	Worm Bushing (front)	RD14986	Bail Assembly
RD 6606	Screw	RD12911	Oscillating Slider Bushing	RD14987	Bail Trip Strike
RD 7665	Screw	RD12912	Oscillating Slider	RD14988	Anti-Reverse Lever Cover
RD 7919	Click Spring	RD12914	Worm Shaft Retainer	RD14989	Drive Gear
RD 7920	Click Pin	RD12915	Worm Shaft	RD14990	Side Cover
RD 7945	Nut	RD12916	Oscillating Guide	RD14991	Handle Assembly
RD 8594	Eared Washer	RD12922	Bail Spring Cover	RD14992	Rear Protector
RD 8654	Drag Washers Retainer	RD12924	Bail Hold Support Guard	RD14993	Body
RD 9379	Screw	RD13044	Oil Cap	RD15233	Idle Gear
RD10377	Screw	RD13185	Ball Bearing	RD15344	Main Shaft
RD10420	Bearing Spacer	RD13188	Ball Bearing		