# PARTS DIAGRAM

## TERROVA 80

### 80 LBS THRUST - 24 VOLT - 45”/54”/60”/72” SHAFT

This page provides Minn Kota® WEEE compliance disassembly instructions. For more information about where you should dispose of your waste equipment for recycling and recovery and/or your European Union member state requirements, please contact your dealer or distributor from which your product was purchased.

Tools required, but not limited to: flat head screw driver, Phillips screw driver, socket set, pliers, wire cutters.

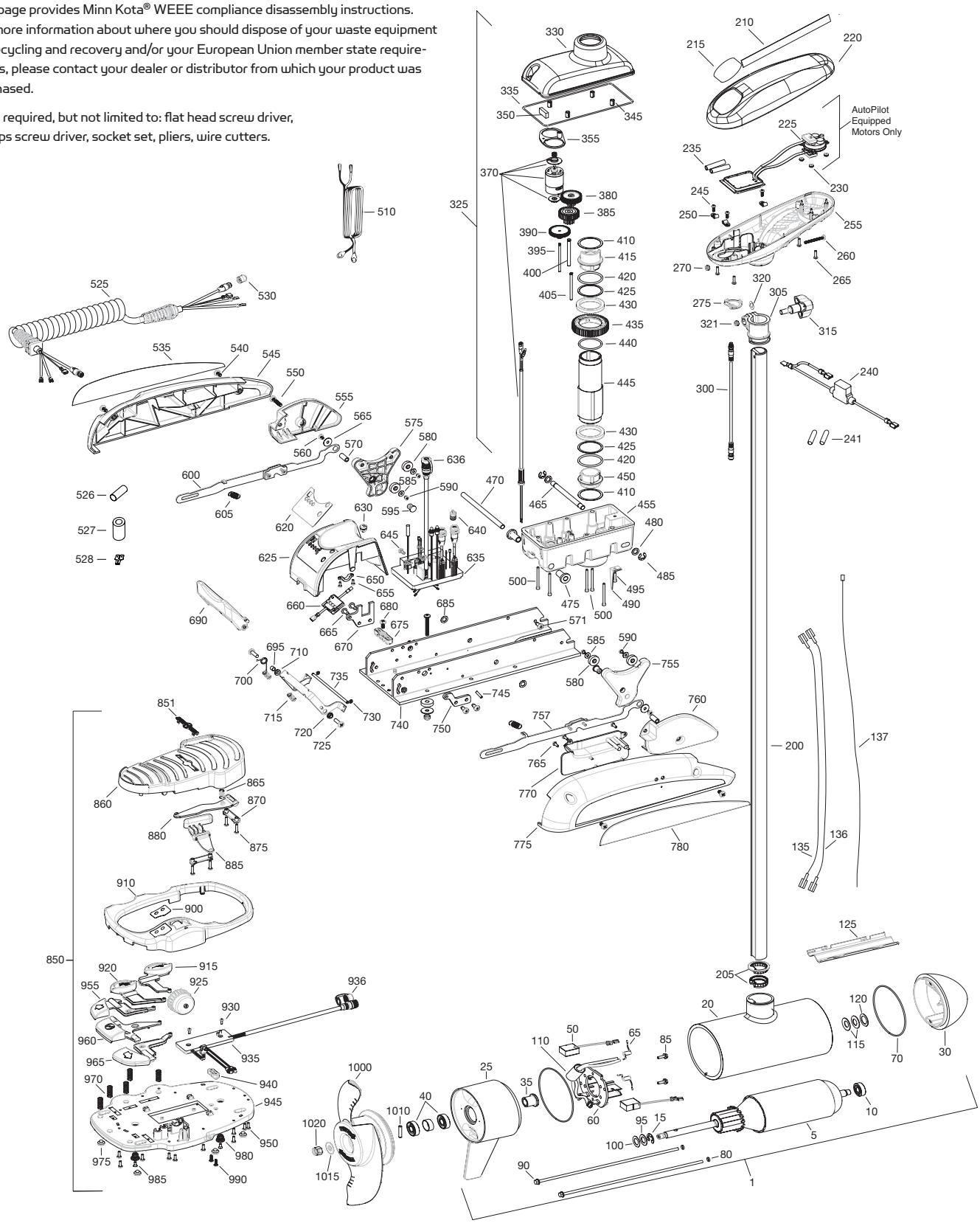


Part #2324951 ECN 36894 Rev G 11/15

©2014 Johnson Outdoors Marine Electronics, Inc.

# PARTS LIST

## TERROVA 80

### 80 LBS THRUST - 24 VOLT - 45”/54”/60”/72” SHAFT

| ITEM | QTY | PART NUMBER | DESCRIPTION |
|---|---|---|---|
| 1 | 1 | 2777000 | 24V MOTOR 45” FW |
| | 1 | 2777001 | 24V MOTOR 54” FW |
| | 1 | 2777002 | 24V MOTOR 60” FW |
| | 1 | 2777005 | 24V MOTOR US2 45” |
| | 1 | 2777003 | 24V MOTOR US2 54” |
| | 1 | 2777004 | 24V MOTOR US2 60” |
| | 1 | 2777013 | 24V MOTOR US2 72” |
| 5 | 1 | 2-100-214 | ARMATURE ASSEMBLY |
| 10 | 1 | 140-010 | BEARING |
| 15 | 1 | 788-040 | RETAINING RING |
| 20 | | | INCLUDED IN #200 ASSY |
| 25 | 1 | 2-300-170 | BRUSH END HSING ASSY |
| 30 | 1 | 421-276 | PLAIN END HSING ASSY STD |
| | 1 | 9421-284 | PLAIN END HOUSING US2 45” |
| | 1 | 9421-285 | PLAIN END HOUSING US2 54” |
| | 1 | 9421-286 | PLAIN END HOUSING US2 60” |
| | 1 | 9421-291 | PLAIN END HOUSING US2 72” |
| 35 | 1 | 144-017 | FLANGE BEARING |
| 40 | 2 | 880-025 | SEAL |
| 50 | 2 | 188-094 | BRUSH |
| 60 | 1 | 2-600-193 | BRUSH PLATE ASSEMBLY 45” |
| | | 2-600-192 | BRUSH PLATE ASSEMBLY 54” |
| | | 2-600-199 | BRUSH PLATE ASSEMBLY 60” |
| 65 | 2 | 975-041 | BRUSH SPRING |
| 70 | 2 | 701-043 | MOTOR O-RING |
| 80 | 2 | 701-009 | O-RING — THRU-BOLT |
| 85 | 2 | 830-027 | SCREW, 10-32 X 2 |
| 90 | 2 | 830-094 | THRU-BOLT |
| | 2 | 830-095 | THRU-BOLT SONAR ONLY |
| 95 | 2 | 990-051 | WASHER — STEEL |
| 100 | 2 | 990-052 | WASHER — NYLATRON |
| 110 | 2 | 973-025 | SPACER — BRUSH PLATE |
| 115 | 2 | 992-010 | WASHER — BELLEVILLE |
| 120 | 1 | 990-045 | SPACER — THRUST |
| 125 | 1 | 582-013 | CLIP, RETAINING, SHORT |
| 135 | 1 | 640-013 | LEADWIRE — BLACK 45” |
| | 1 | 640-017 | LEADWIRE — BLACK 54” |
| | 1 | 640-025 | LEADWIRE — BLACK 60” |
| | 1 | 640-024 | LEADWIRE — BLACK 72” |
| 136 | 1 | 640-117 | LEADWIRE — RED 45” |
| | 1 | 640-132 | LEADWIRE — RED 54” |
| | 1 | 640-133 | LEADWIRE — RED 60” |
| | 1 | 640-125 | LEADWIRE — RED 72” |
| 137 | 1 | 640-315 | GROUNDWIRE — BROWN, US2 ONLY 45” |
| | 1 | 640-316 | GROUNDWIRE — BROWN, US2 ONLY 54” |
| | 1 | 640-317 | GROUNDWIRE — BROWN, US2 ONLY 60”/72” |
| 200 | 1 | 2777096 | COMPOSITE TUBE 60” FW |
| | 1 | 2777097 | COMPOSITE TUBE 72” FW |
| 205 | | | INCLUDED IN #200 ASSY |

| ITEM | QTY | PART NUMBER | DESCRIPTION |
|---|---|---|---|
| 210 | 2 | 2325665 | DECAL — COVER |
| 215 | 1 | 2325674 | DECAL — CTRL BOX 80 |
| | 1 | 2325675 | DECAL — CTRL BOX 80 US2 |
| | 1 | 2325676 | DECAL — CTRL BOX 80 AUTOPILOT |
| | 1 | 2325677 | DECAL — CTRL BOX 80 AUTOPILOT & US2 |
| 220 | 1 | 2320200 | COVER, CTRL BOX |
| 225 | 1 | 2324032 | CTRL BOARD, COMPASS, AUTOPILOT ONLY |
| 230 | 3 | 2302960 | GROMMET — COMPASS AUTOPILOT ONLY |
| 235 | 2 | 2065400 | WIRE INSULATOR |
| 240 | 1 | 2218200 | FUSE HOLDER — US2 ONLY |
| 241 | 2 | 2375400 | SHRINK TUBE — 1/4” OD X 1 3/4” |
| 245 | 3 | 2372100 | SCREW — 8-18 X .625 |
| 250 | 3 | 2052510 | CABLE CLAMP |
| 255 | 1 | 2322500 | CTRL BOX |
| 260 | 1 | 2332102 | SCREW — 10-24 |
| 265 | 4 | 2372100 | SCREW — 8-18 X .625 |
| 270 | 1 | 2333101 | NUT — 10-24 |
| 275 | 1 | 2224700 | PLUG — CTRL BOX SMALL HOLE - US2 |
| | 1 | 2224702 | PLUG — CTRL BOX NO HOLE |
| | 1 | 2224704 | PLUG — CTRL BOX LARGE HOLE - US2/LINK |
| 300 | 1 | 2211415 | UNIVERSAL SONAR 2 EXTENSION CABLE |
| 305 | 1 | 2771500 | DEPTH COLLAR ASSY |
| 315 | 1 | 2260906 | KNOB (INCLUDED IN #305) |
| 320 | 1 | 2321702 | WASHER (INCLUDED IN #305) |
| 321 | 1 | 2323102 | NUT (INCLUDED IN #305) |
| 325 | 1 | 2997020 | STEERING HOUSING |
| 330 | 1 | 2326501 | STEERING HOUSING TOP |
| 335 | 1 | 2324604 | O-RING, CASE SEAL |
| 345 | 4 | 2305605 | ROLL PIN 5/16 |
| 350 | 1 | 2308601 | BREATHER, FILTER |
| 355 | 1 | 2328610 | CRADLE, MOTOR |
| 370 | 1 | 2777020 | MOTOR, STEERING ASSY |
| 380 | 1 | 2302255 | GEAR CLUSTER (3RD STAGE) |
| 385 | 1 | 2302250 | GEAR CLUSTER (2ND STAGE) |
| 390 | 1 | 2302245 | GEAR CLUSTER (1ST STAGE) |
| 395 | 1 | 2302610 | GEAR SHAFT (1ST STAGE) |
| 400 | 1 | 2302620 | GEAR SHAFT (3RD STAGE) |
| 405 | 1 | 2302615 | GEAR SHAFT (2ND STAGE) |
| 410 | 2 | 2321704 | WASHER — THRUST |
| 415 | 1 | 2321515 | LINER — OUTPUT TUBE |
| 420 | 2 | 2324608 | O-RING — 224 |
| 425 | 2 | 2321720 | SHIM — O-RING |
| 430 | 2 | 2327308 | SEALED BALL BEARING |
| 435 | 1 | 2322200 | GEAR — OUTPUT |
| 440 | 1 | 2324601 | O-RING — OUTPUT GEAR |
| 445 | 1 | 2322030 | TUBE — OUTPUT MACHINED |
| 450 | 1 | 2321510 | COLLAR, DRIVE BOTTOM |
| 455 | 1 | 2326506 | STEERING HOUSING, BOTTOM |
| 465 | 1 | 2322600 | PIN — LATCH, ZINC PLATE |
| 470 | 1 | 2322602 | PIN — PIVOT, ZINC PLATE |
| 475 | 2 | 2327310 | BUSHING, PIVOT PIN |
| 480 | 2 | 2321702 | WASHER, FLAT .375 |


©2014 Johnson Outdoors Marine Electronics, Inc.

# PARTS LIST

| ITEM | QTY | PART NUMBER | DESCRIPTION |
|---|---|---|---|
| 485 | 2 | 2263011 | E-RING .375 |
| 490 | 2 | 2322702 | SPRING — LATCH PIN |
| 495 | 1 | 2323410 | SCREW, 8-32 X .75 |
| 500 | 7 | 2323408 | SCREW, 8-32 X 2 |
| 510 | 1 | 2090651 | LEADWIRE — 10 GA |
| 525 | 1 | 2991274 | COIL CORD, US2, 45” |
| | 1 | 2991272 | COIL CORD, US2, 54” / 60” / 72” |
| 526 | 1 | 2325401 | SHRINK TUBE — 3/4” ID X 2” W/ADHS |
| 527 | 1 | 2307313 | BEAD — FERRITE |
| 528 | 1 | 2320710 | TERMINAL AMP (T-TAB) |
| 530 | 1 | 2320202 | CAP, DUST, COIL CORD —NON-AP ONLY |
| 535 | 1 | 2325641 | DECAL, SIDEPLATE, LEFT |
| 540 | 4 | 2323404 | SCREW, 1/4-20 |
| 545 | 1 | 2321915 | SIDEPLATE, LEFT |
| 550 | 2 | 2323403 | SCREW, 1/4-20 X .375 |
| 555 | 1 | 2321925 | SKID, LEFT |
| 560 | 2 | 2323422 | SCREW, 10-24 X .375 |
| 565 | 2 | 2321700 | WASHER, #10 SS |
| 570 | 2 | 2322920 | STAND-OFF, ALUM PLAIN |
| 571 | 1 | 2323405 | SCREW, 1/4” - 20 X 1/2” MCH SS |
| 575 | 1 | 2323905 | RAMP — 4” LEFT |
| 580 | 4 | 2325115 | PAD — RUBBER REST |
| 585 | 4 | 2321706 | WASHER, #8 |
| 590 | 4 | 2323412 | SCREW, 8-18 X .25 |
| 595 | 2 | 2324705 | INSERT — RAMP |
| 600 | 1 | 2994202 | RELEASE ARM ASSEMBLY |
| 605 | 2 | 2322710 | SPRING — EXTENSION |
| ■ | 1 | 2770250 | COVER — SPEED CONTROL WITH DECAL |
| 620 | 1 | 2325650 | DECAL, SPEED CONTROL |
| 625 | 1 | 2320210 | COVER, SPEED CONTROL |
| 630 | 1 | 2322901 | STRAIN RELIEF |
| 635 | 1 | 2324019 | CONTROL BOARD, 24-36V STANDARD (2 PLUGS) |
| | 1 | 2324023 | CONTROL BOARD, 24-36V IPILOT & LINK (1 PLUG) |
| ■ | | 2884050 | SWITCH — REED REPAIR KIT |
| 636 | 1 | 2320208 | DUST PLUG |
| 640 | 1 | 2320203 | CAP, DUST, CTRL BOARD |
| 645 | 2 | 2323406 | SCREW, 10-24 X .50 CRPH SS |
| 650 | 1 | 2321315 | HOLDER, CONNECTOR |
| 655 | 2 | 2332103 | SCREW, 6-20 X .375 |
| 660 | 1 | 2074071 | BATTERY METER, 24V |
| 665 | 4 | 2323402 | SCREW, 1/4-20 X .375 |
| 670 | 1 | 2321940 | BRACKET, STRAIN RELIEF |
| 675 | 1 | 2321310 | STRAIN RELIEF, WIRE |
| 680 | 1 | 2323405 | SCREW, 1/4-20 X .5 |
| 685 | 2 | 2013100 | SPEED NUT, .375 |
| 690 | 1 | 2320215 | HANDLE, RELEASE CVR |
| 695 | 1 | 2301700 | BUSHING, SPACER - RELEASE LEVER - BRASS |
| 700 | 1 | 2322701 | TORSION SPRING |
| 710 | 1 | 2320400 | HANDLE, RELEASE FW |
| 715 | 2 | 2322712 | RELEASE HANDLE SPRING |
| 720 | 2 | 2322604 | BUSHING, HANDLE |
| 725 | 2 | 2332104 | SCREW, 1/4-20 X .625 |

## TERROVA 80

### 80 LBS THRUST - 24 VOLT - 45”/54”/60”/72” SHAFT

| ITEM | QTY | PART NUMBER | DESCRIPTION |
|---|---|---|---|
| 730 | 2 | 2323000 | E-CLIP, 3/16, SS |
| 735 | 1 | 2322606 | PIN, FOLLOWER, HANDLE |
| 740 | 1 | 2321905 | BASE EXTRUSION, MACH |
| 745 | 2 | 2322912 | SPRING PIN, |
| 750 | 1 | 2321950 | BRACKET, SIDEPLATE |
| 755 | 1 | 2323900 | RAMP — 4” RIGHT |
| 757 | 1 | 2994204 | ARM, RELEASE, RIGHT |
| 760 | 1 | 2321920 | SKID, RIGHT |
| 765 | 3 | 2301310 | SCREW, 8-18 X .5 |
| 770 | 1 | 2320220 | COVER, ACCESS, FW |
| 775 | 1 | 2321910 | SIDEPLATE, RIGHT |
| 780 | 1 | 2325640 | DECAL, SIDEPLATE, RIGHT |
| 850 | 1 | 2994720 | FOOT PEDAL |
| 851 | 1 | 2326710 | PLUG, FOOT PEDAL |
| 860 | 1 | 2324400 | PEDAL, HEEL-TOE |
| 865 | 1 | 2322714 | SPRING, MOMENTARY |
| 870 | 2 | 2321300 | CLAMP |
| 875 | 4 | 2223430 | SCREW, 8 X .75 |
| 880 | 1 | 2328600 | FLEX FINGER |
| 885 | 1 | 2323710 | BUTTON, MOMENTARY, LEFT |
| 900 | 1 | 2325660 | DECAL, FOOT PEDAL |
| 910 | 1 | 2320205 | COVER, HEEL-TOE |
| 915 | 1 | 2323725 | BUTTON, AP |
| 920 | 1 | 2323715 | BUTTON, MOM/CON |
| 925 | 1 | 2320100 | KNOB, SPEED, FOOT PEDAL |
| 930 | 2 | 2332103 | SCREW, 6-20 X .375 |
| 935 | 1 | 2324021 | CONTROL BOARD, FT PEDAL |
| 936 | 1 | 2320207 | DUST CAP |
| 940 | 1 | 2322900 | STRAIN RELIEF, FT PEDAL |
| 945 | 1 | 2324500 | BASE PLATE, FT PEDAL |
| 950 | 10 | 2301310 | SCREW, #8 X .5 |
| 955 | 1 | 2323730 | BUTTON, STEER, LEFT |
| 960 | 1 | 2323735 | BUTTON, MOMENTARY |
| 965 | 1 | 2323701 | BUTTON, STEER, RIGHT |
| 970 | 5 | 2322704 | SPRING, FOOT PEDAL |
| 975 | 1 | 2994859 | BUMPER, BAG ASSY |
| 980 | 2 | 2322706 | SPRING, BARREL |
| 985 | 2 | 2323420 | SCREW, 8-18 X .375 |
| 990 | 2 | 2372100 | SCREW, 8-18 X .625 |
| ■ | | 1378132 | PROPELLER KIT WW2 |
| ■ | | 2994876 | PROPELLER BAG ASSY |
| 1000 | 1 | 2331160 | PROPELLER WW2 |
| 1010 | 1 | 2262658 | DRIVE PIN, LARGE |
| 1015 | 1 | 2091701 | WASHER, PROP, LARGE |
| 1020 | 1 | 2093101 | NUT, NYLOCK, PROP, LARGE |
| ■ | | 2994864 | MOUNTING HARDWARE BAG ASSY |
| ■ | | 2889460 | SEAL & ORING KIT |

■ THIS ITEM IS PART OF AN ASSEMBLY.

*THIS ITEM IS PART OF A KIT AND ONLY LISTED FOR VIEWING PURPOSES.

©2014 Johnson Outdoors Marine Electronics, Inc.