PARTS DIAGRAM & PARTS LIST

RIPTIDE ULTERRA - 80/112 LBS THRUST - 24/36 VOLT - 54"/60"/72" SHAFT

The parts diagram and parts list provides Minn Kota® WEEE compliance disassembly instructions. For more information about where you should dispose of your waste equipment for recycling and recovery and/or your European Union member state requirements, please contact your dealer or distributor from which your product was purchased. Tools required, but not limited to: flat head screwdriver, Phillips screwdriver, socket set, pliers, wire cutters.

RIPTIDE ULTERRA CONTROL HEAD

Control Head Parts Diagram

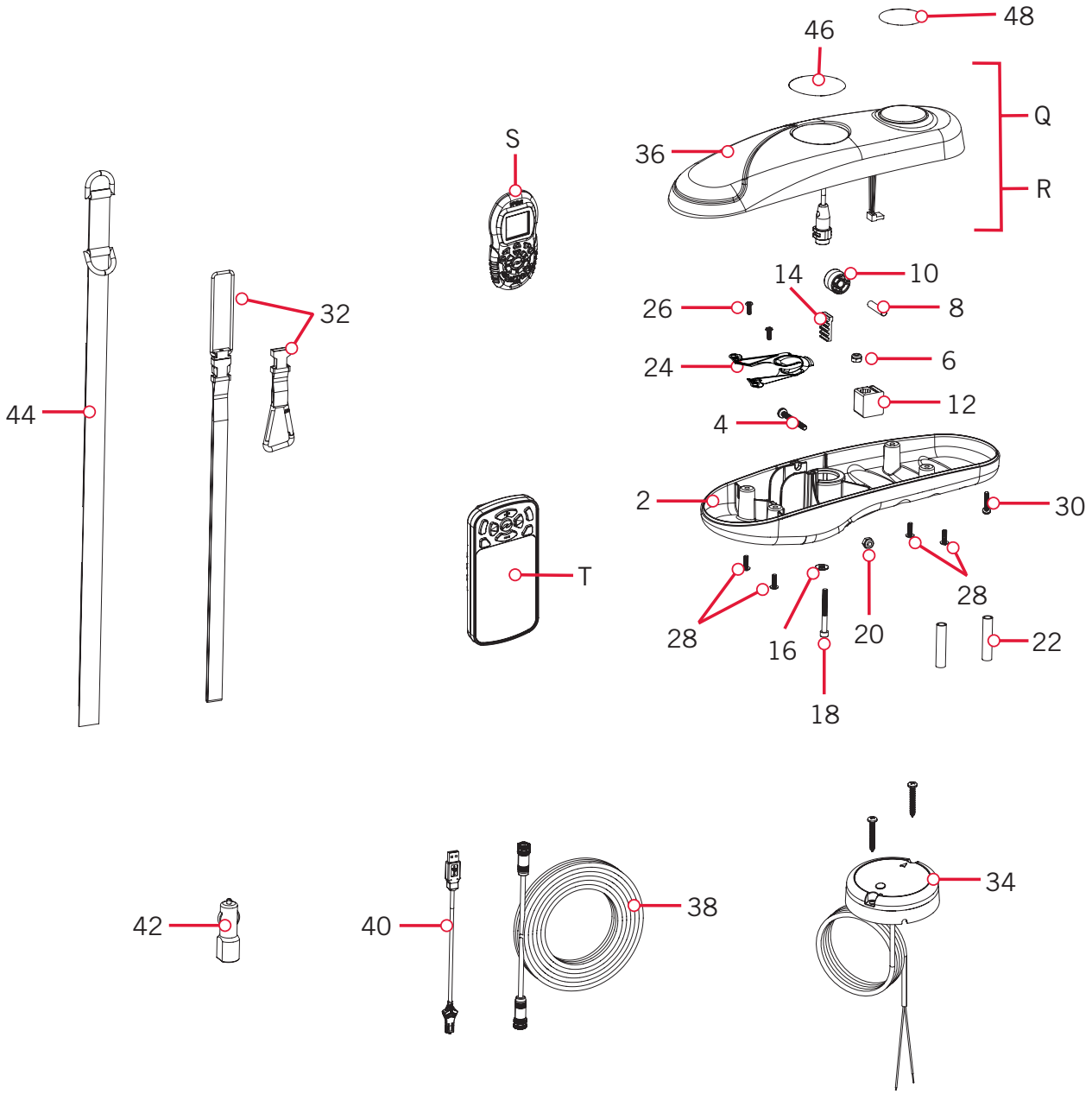

©2019 Johnson Outdoors Marine Electronics, Inc.

Control Head Parts List

Assembly	Part #	Description	Notes	Quantity
Q	2774116	iPILOT CONTRLR 1.6 RT ULT	♦	1
R	2774118	iPLINK CONTRLR 3.0 RT ULT	⬣	1
S	2994075	REMOTE ASSY, IPILOT 1.6	♦	1
T	2994076	REMOTE ASSY, IPILOT LINK	⬣	1
Item	**Part #**	**Description**	**Notes**	**Quantity**
2	2202507	CONTROL BOX BOTTOM, SW		1
4	2263406	SCREW-#10-24 X 2" S/S PPH		1
6	2333101	NUT-HEX #10-24 UNC-2B NYL SS		1
8	2202635	PIN-DOWEL, 1/4" OD SS		1
10	2202335	PULLEY, BELT, TOP		1
12	2202800	BLOCK, BELT		1
14	2200800	BELT-RACK, LOWER		1
16	2201721	WASHER-#10 SAE, SS		1
18	2203411	SCREW-#10-24,SHCS,SS, RIE 4606		1
20	2333101	NUT-HEX #10-24 UNC-2B NYL SS		1
22	2305402	SHRINK TUBE-.374 OD X 2.25"		2
24	2224707	PLUG, SCREW-DOWN, WHT		1
26	2372103	SCREW-#6 X .375 PLASTITE SS		2
28	2372100	SCREW-#8-18 X 5/8 THD* (SS		4
30	2203403	SCREW-#6 X 1.0 BRASS HI-LO		1
32	2390800	LANYARD w/CARABINEER,IP REMOTE	♦⬣	1
34	2996400	HEADING SENSOR ASSEMBLY	♦⬣	1
36	2200209	CONTROL BOX COVER, SW		1
38	490389-1	CABLE, ETH (M12-M-M12-F, 30'	⬣	1
40	2373241	CABLE, USB REMOTE CHARGER LINK	⬣	1
42	2395900	ADAPTER, USB DC POWER LINK	⬣	1
44	2203800	STRAP, HOLD DOWN		1
46	2205533	DECAL, PUSH BTN TOP,ULT 80 SW		1
	2205531	DECAL, PUSH BTN TOP,ULT 112 SW		1
48	2395546	DECAL, DOMED iPILOT SW	♦	1
	2395548	DECAL, DOMED iPILOT LINK SW	⬣	1
▲	2397102	MANUAL, iPILOT LINK 3.0	⬣	1
▲	2397107	GUIDE-QUICK REFERENCE, iP 3.0	♦	1
▲	2397100	MANUAL, iPILOT 1.6	♦	1
▲	2397106	GUIDE-QUICK REFERENCE, iP 1.6	♦	1

▲ *Not shown on Parts Diagram.*
✖ *This part is included in an assembly and cannot be ordered individually.*
♦ *Only available with models factory installed with i-Pilot.*
⬣ *Only available with models factory installed with i-Pilot Link.*

©2019 Johnson Outdoors Marine Electronics, Inc.

Item	Part #	Description	Notes	Quantity
▲	2394900	INSTRUCTIONS, HEADING SENSOR		1
▲	2207114	MANUAL,INSTALL GUIDE,RT ULT BT		1
▲	2207112	MANUAL, RT ULTERRA BT		1
▲	2207105	QUICK REFERENCE GUIDE, ULTERRA		1
▲	2297165	MANUAL-DISCLAIMER,DWNLOAD INFO		1

▲ *Not shown on Parts Diagram.*
✖ *This part is included in an assembly and cannot be ordered individually.*
♦ *Only available with models factory installed with i-Pilot.*
⬢ *Only available with models factory installed with i-Pilot Link.*

©2019 Johnson Outdoors Marine Electronics, Inc.

RIPTIDE ULTERRA MOTOR

24 Volt 4" Parts Diagram

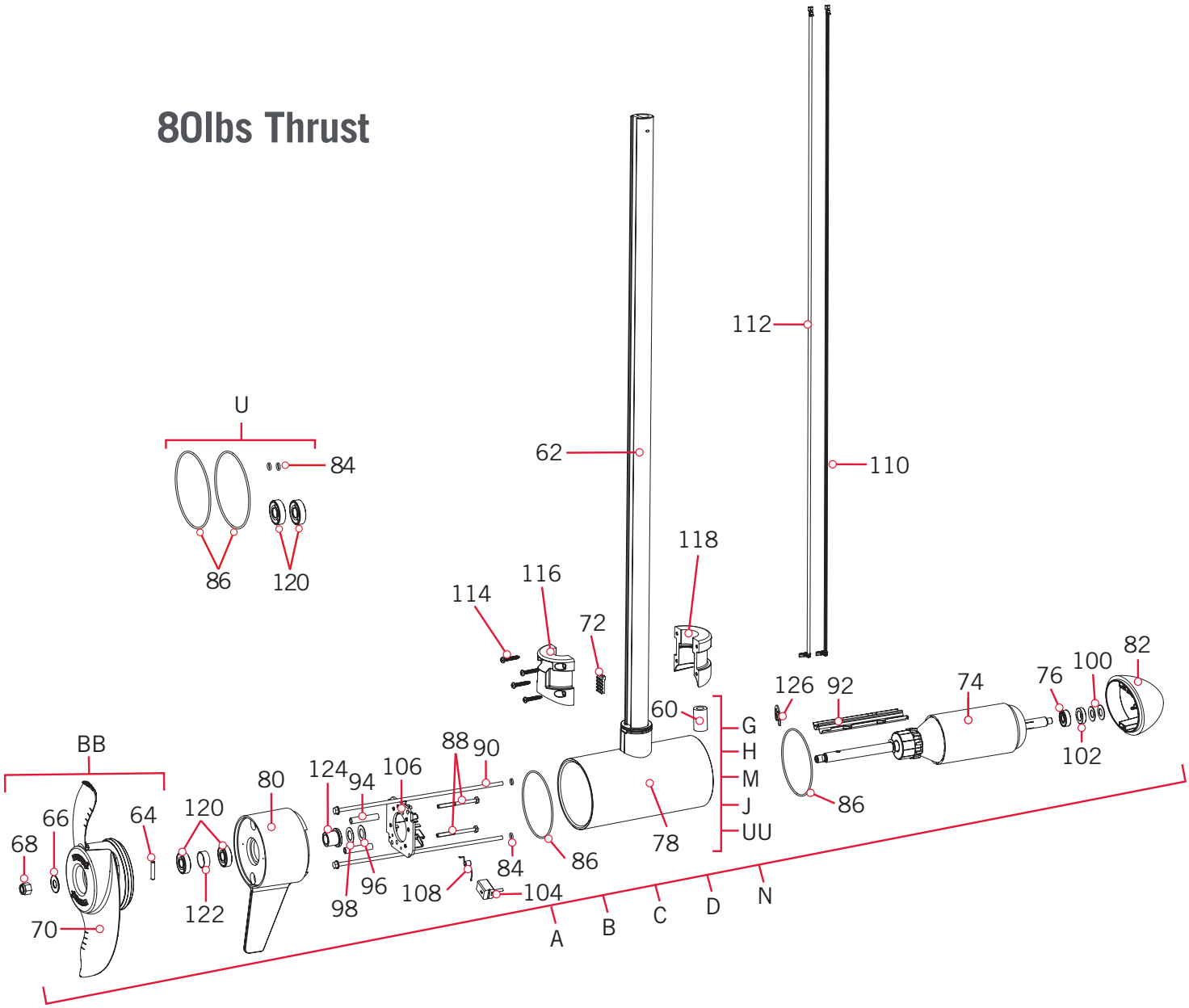

©2019 Johnson Outdoors Marine Electronics, Inc.

24 Volt 4" Motor Parts List

Assembly	Part #	Description	Notes	Quantity
A	2417037	MTR/TUBE ASSY 80# 54" RT	*MOTOR & TUBE*	1
B	2417038	MTR/TUBE ASSY 80# 60" RT	*MOTOR & TUBE*	1
C	2417037	MTR/TUBE ASSY 80# 54" RT	*MOTOR & TUBE* *M SKU EUROPE*	1
D	2417038	MTR/TUBE ASSY 80# 60" RT	*MOTOR & TUBE* *M SKU EUROPE*	1
N	2417035	MTR/TUBE ASSY 80# 72" RT	*MOTOR & TUBE* *M SKU EUROPE* *A SKU*	1
G	2777392	CTR HSG ASY, CB, 80#, SW, 54" TUBE	*TUBE*	1
H	2777393	CTR HSG ASY, CB, 80#, SW, 60" TUBE	*TUBE*	1
M	2777394	CTR HSG ASY, CB, 80#, SW, 54" TUBE	*TUBE* *M SKU EUROPE*	1
J	2777395	CTR HSG ASY, CB, 80#, SW, 60" TUBE	*TUBE* *M SKU EUROPE*	1
UU	2777391	CTR HSG TUBE ASY 80#, SW, 72"	*TUBE* *M SKU EUROPE* *A SKU*	1
BB	1378132	80# THRUST PROP KIT		1
U	2889460	SEAL & O-RING KIT		1
Item	**Part #**	**Description**	**Notes**	**Quantity**
60	✖	BEAD-FERRITE	*M SKU* *EUROPE ONLY* *ASSEMBLY C, D, N, M, J, UU*	1
62	✖	TUBE-COMP,WHT,60",w/1/4" WALL	*ASSEMBLY B, D, H, J*	1
	✖	TUBE-COMP,WHT,72",w/1/4" WALL	*ASSEMBLY N, UU*	1
	✖	TUBE-COMP,WHT,54", w/1/4" WALL	*ASSEMBLY A, C, M*	1
▲	✖	SEAL,BUNG UPPER,SW		1
▲	✖	SEAL,BUNG LOWER		1
64	2262658	PIN-DRIVE 1" X 3/16" S/S		1
66	2091701	WASHER-PROP (LARGE)		1
68	2093101	NUT-PROP,NYLOC,LG,MX101 3/8 SS		1
70	2331160	PROP-WW2 (4") w/ADP.RING		1
72	2200800	BELT-RACK, LOWER		1
74	2-100-214	ARM ASSY 24V 4" 80# (WW2)		1
76	140-010	BEARING - BALL		1
78	✖	CTR HSG ASM 4.0" SW CB MGNTZD	*ASSEMBLY A, B, C, D OR U*	1
80	2-300-370	BRUSH END HSG ASY SW/W 4.0		1
82	421-376	HSG PLN END 4" SW WHT BS		1
84	701-009	O-RING, THRU BOLT		2
86	701-043	O-RING		2
88	830-027	SCREW - SELF-THREAD 10-32X2.25		2
90	830-094	THRU BOLT 12-24 X10.31		2
92	582-013	CLIP, RETAINING SHORT		1

▲ *Not shown on Parts Diagram.*
✖ *This part is included in an assembly and cannot be ordered individually.*
♦ *Only available with models factory installed with i-Pilot.*
● *Only available with models factory installed with i-Pilot Link.*

©2019 Johnson Outdoors Marine Electronics, Inc.

PARTS DIAGRAM & PARTS LIST

Item	Part #	Description	Notes	Quantity
94	973-025	SPACER - BRUSHPLATE		2
96	990-051	WASHER - STEEL THRUST		1
98	990-052	WASHER - NYLATRON		1
100	992-010	WASHER - BELLEVILLE		2
102	990-045	SPACER - THRUST		1
104	188-094	BRUSH W/TERMINAL		2
▲	✖	BRUSH HOLDER		2
106	9-738-015	BRUSH PLATE-4" terminal		1
▲	✖	RIVET-.25"		6
108	975-041	SPRING - TORSION		2
▲	✖	CONNECTOR 1/4 MALE TAB QD		2
110	640-025	LEADWIRE BLK 10 AWG 66 3/4 XLP	*54*	1
	640-022	LEADWIRE BLK 10 AWG 72.5 XLP	*60*	1
	640-053	LEADWIRE BLK 10 AWG 82.375 XLP	*72*	1
112	640-133	LEADWIRE RED 10AWG 66-1/4 XLP	*54*	1
	640-126	LEADWIRE RED 10AWG 71" XLP	*60*	1
	640-155	LEADWIRE RED 10 AWG 83.625 XLP	*72*	1
114	3393480	SCREW-#10 X 1.0" PPH HI-LOSS		4
116	2201505	COLLAR, BELT CLAMP		1
118	2201500	COLLAR, CLAMP		1
120	880-025	SEAL		2
122	725-095	PAPER TUBE		1
124	144-017	BEARING		1
126	788-040	RETAINING RING		1

▲ *Not shown on Parts Diagram.*
✖ *This part is included in an assembly and cannot be ordered individually.*
♦ *Only available with models factory installed with i-Pilot.*
● *Only available with models factory installed with i-Pilot Link.*

©2019 Johnson Outdoors Marine Electronics, Inc.

RIPTIDE ULTERRA MOTOR

36 Volt 4.5" Motor Parts Diagram

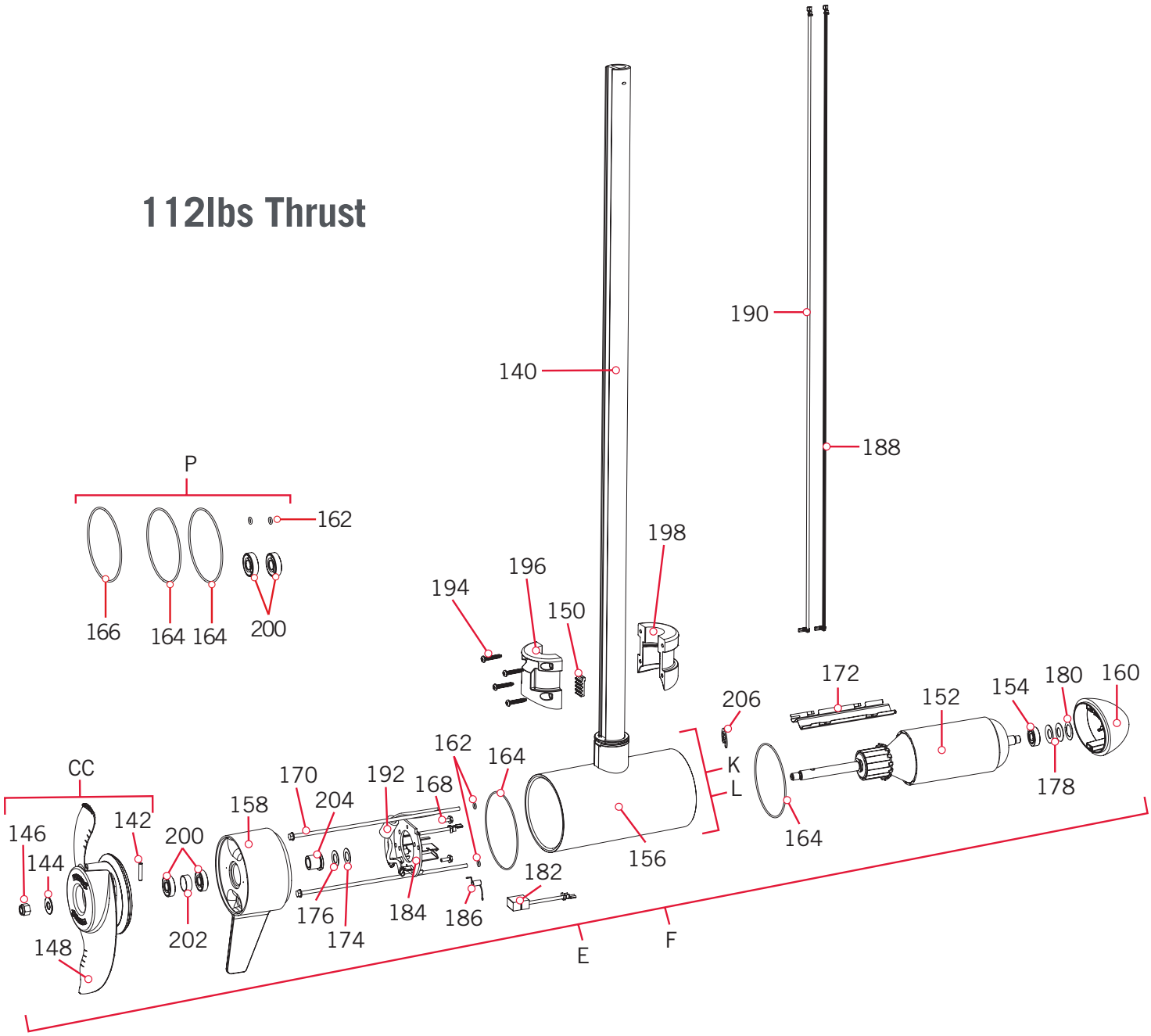

©2019 Johnson Outdoors Marine Electronics, Inc.

36 Volt 4.5" Motor Parts List

Assembly	Part #	Description	Notes	Quantity
E	2417097	MTR/TUBE ASSY 112# 60" RT	*MOTOR & TUBE*	1
F	2417086	MTR/TUBE ASSY 112# 72" RT	*MOTOR & TUBE*	1
K	2777347	CTR HSG ASY, CB, 112#, SW, 60" TUBE	*TUBE*	1
L	2777348	CTR HSG ASY, CB, 112#, SW, 72" TUBE	*TUBE*	1
CC	1378160	112# THRUST PROP KIT		1
P	2881450	SEAL & O-RING KIT 112		1
Item	**Part #**	**Description**	**Notes**	**Quantity**
140	✖	TUBE-COMP,WHT,60",w/1/4" WALL	*ASSEMBLY E, K*	1
	✖	TUBE-COMP,WHT,72",w/1/4" WALL	*ASSEMBLY F, L*	1
▲	✖	SEAL,BUNG UPPER,SW		1
▲	✖	SEAL,BUNG LOWER		1
142	2262658	PIN-DRIVE 1" X 3/16" S/S		1
144	2091701	WASHER-PROP (LARGE)		1
146	2093101	NUT-PROP,NYLOC,LG,MX101 3/8 SS		1
148	2341160	PROP-WW2 (4.5) w/ADP.RING		1
150	2200800	BELT-RACK, LOWER		1
152	2-100-245	ARMATURE ASY 4.5"LWR UNIT		1
154	140-014	BEARING-BALL 6000		1
156	✖	CTR HSG ASM 4.5" SW CB MGNTZD	*ASSEMBLY E OR F*	1
158	2-300-176	BRUSH END HSG ASY 4.5" SW		1
160	421-241	PLAIN END HSG 4.5" PNTD SW		1
162	701-009	O-RING, THRU BOLT		2
164	701-098	O-RING, 98MM X 2MM		2
166	701-103	O-RING,103MM X 3.00MM, 70 BUNA		1
168	2053410	SCREW-#8-32 X 1/2 TRI-LOBE HEX		2
170	830-094	THRU BOLT 12-24 X10.31		2
172	582-016	CLIP-RETAINING, SONAR		1
174	990-051	WASHER - STEEL THRUST		1
176	990-052	WASHER - NYLATRON		1
178	992-011	WASHER-BELLEVILLE		2
180	990-011	WASHER-SHIM OD 1",ID.630"SS		1
182	188-095	BRUSH		2
▲	✖	BRUSH HOLDER		2
184	738-011	BRUSH PLATE		1

▲ *Not shown on Parts Diagram.*
✖ *This part is included in an assembly and cannot be ordered individually.*
♦ *Only available with models factory installed with i-Pilot.*
● *Only available with models factory installed with i-Pilot Link.*

©2019 Johnson Outdoors Marine Electronics, Inc.

Item	Part #	Description	Notes	Quantity
▲	✖	RIVET-.25"		6
186	975-045	SPRING-TORSION		2
▲	✖	TERMINAL 1/4" MALE TAB-THREE		2
188	640-045	LEADWIRE BLK 10AWG 76 1/2" GPT	*60*	1
	640-049	LEADWIRE BLK 10AWG 88.50" GPT	*72*	1
190	640-145	LEADWIRE RED 10AWG 75 7/8" GPT	*60*	1
	640-149	LEADWIRE RED 10AWG 88" GPT	*72*	1
192	2307312	BEAD-FERRITE		1
194	3393480	SCREW-#10 X 1.0" PPH HI-LOSS		4
196	2201505	COLLAR, BELT CLAMP		1
198	2201500	COLLAR, CLAMP		1
200	880-025	SEAL		2
202	725-095	PAPER TUBE		1
204	144-017	BEARING		1
206	788-040	RETAINING RING		1

▲ *Not shown on Parts Diagram.*
✖ *This part is included in an assembly and cannot be ordered individually.*
♦ *Only available with models factory installed with i-Pilot.*
● *Only available with models factory installed with i-Pilot Link.*

©2019 Johnson Outdoors Marine Electronics, Inc.

RIPTIDE ULTERRA STEERING HOUSING

Steering Housing Parts Diagram

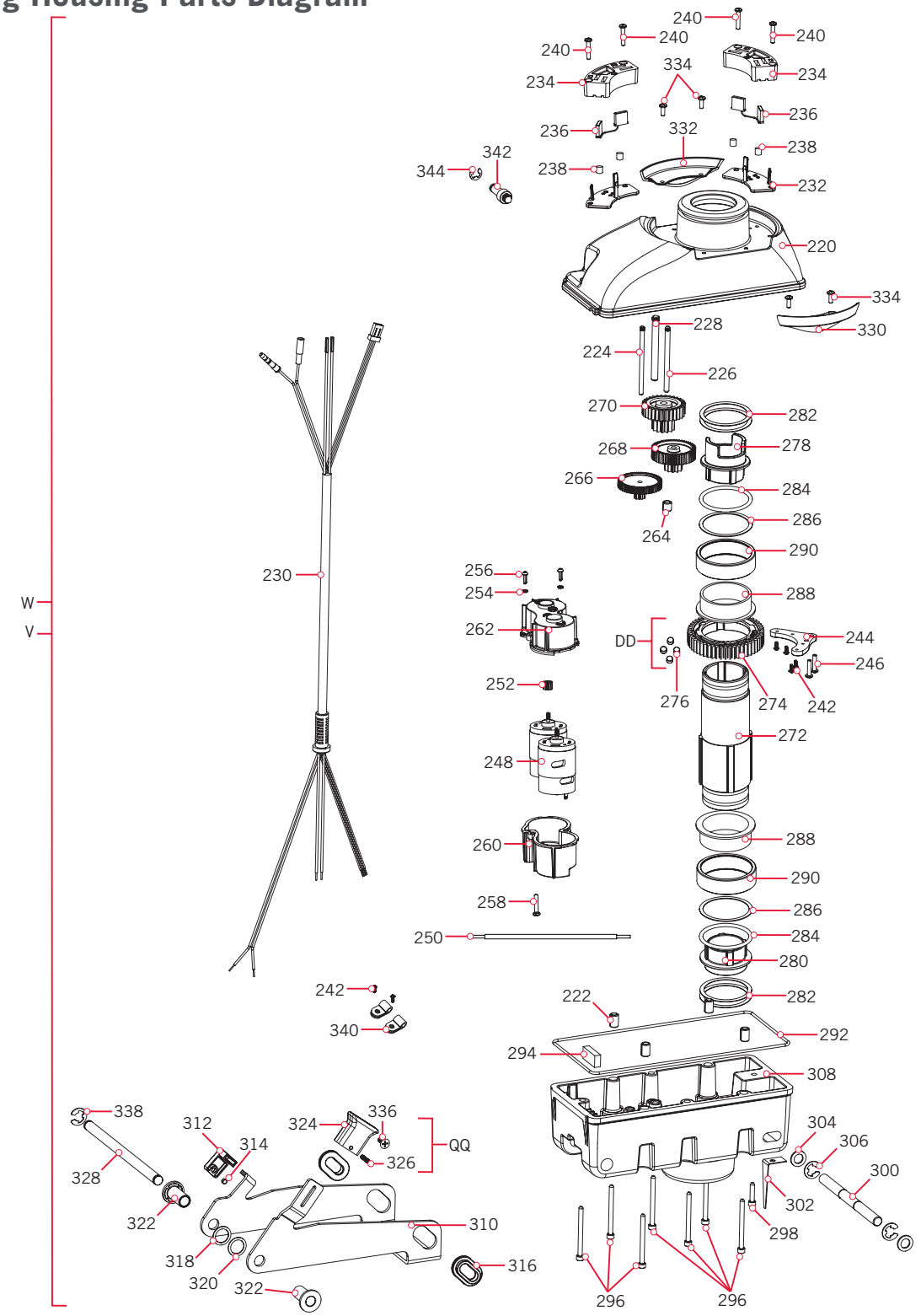

©2019 Johnson Outdoors Marine Electronics, Inc.

Steering Housing Parts List

Assembly	Part #	Description	Notes	Quantity
V	2776524	ASM, STEERING 36V SW	*112LB THRUST*	1
W	2776523	ASM, STEERING 24V SW	*80LB THRUST*	1
DD	2772200	OUTPUT GEAR W/MAGNETS		1
QQ	2770100	RELEASE KNOB WITH SCREW KIT		1
Item	**Part #**	**Description**	**Notes**	**Quantity**
220	✖	STEERING HSG COVER SW PNT		1
222	✖	PIN-ROLL 5/16" X 1/2"		4
224	✖	SHAFT-GEAR, FIRST CLUSTER		1
226	✖	SHAFT-GEAR,INTERMED.CLUSTER		1
228	✖	SHAFT-GEAR, THIRD CLUSTER		1
230	✖	LEADWIRE,STEERING MTR, 8 COND.		1
232	✖	INSULATOR, BLOCK-BRUSH		2
234	✖	BLOCK-BRUSH, SLIPRING		2
236	✖	BRUSH SHUNT ASSEMBLY		2
238	✖	BUMPER, BRUSH BLOCK		4
240	2203408	SCREW-#6-32 X .75" PPH, NYLON		4
242	2373440	SCREW-#4-24 X 1/4 PHCR SS TY B		6
244	2201920	BRACKET-SENSOR, STEERING HSG		1
246	2303412	SCREW-#6-20 X 5/8 SELF TAP		2
248	✖	MOTOR, STEERING 24V T2	*80LB THRUST*	1
	✖	MOTOR, STEERING 36V FW T2	*112LB THRUST*	2
250	2320321	WIRE EXTENSION, 112 MOTOR		2
252	2322215	GEAR-PINION, DR.HSG, STAGE 1		1
254	2051710	LOCKWASHER-SPLIT, 3MM, ZP		2
256	2053422	SCREW-M3-.5 X 10 PPH, ZPS		2
258	2043412	SCREW-#8-18 X 3/4 TY AB SS PPH		1
260	2322520	CASE-MOTOR, STEERING HSG, TOP	*80*	1
	2322521	CASE-MTR,STEER HSG,TOP w/HOLES	*112*	1
262	2322525	CASE-MOTOR,STRG HSG,BTM		1
264	2321730	SPACER,GEAR CLUSTER,STEER HSG		1
266	2322210	GEAR & PINION, DR.HSG, STAGE 2		1
268	2302250	GEAR & PINION,DR. HSG, STAGE 3		1
270	2302255	GEAR & PINION,DR. HSG, STAGE 4		1
272	2322031	TUBE-OUTPUT, SALTWATER		1
274	2322200	GEAR-OUTPUT		1

▲ *Not shown on Parts Diagram.*
✖ *This part is included in an assembly and cannot be ordered individually.*
♦ *Only available with models factory installed with i-Pilot.*
● *Only available with models factory installed with i-Pilot Link.*

©2019 Johnson Outdoors Marine Electronics, Inc.

PARTS DIAGRAM & PARTS LIST

Item	Part #	Description	Notes	Quantity
276	✖	MAGNET-.187X.125 NCKL PLT(N/A)		4
278	2201510	COLLAR-DRIVE, OUTPUT TUBE		1
280	2321510	COLLAR-DRIVE,BOTTOM		1
282	2321704	WASHER-THRUST, STEERING		4
284	2321720	SHIM,O-RING		2
286	2324608	O-RING,224,PD PRO STR HSG		2
288	2327314	BUSHING, PRO STEERING SW		2
290	2327315	BUSHING,ALUMIN. SPACER ST		2
292	2324604	O-RING, CASE SEAL		1
294	2308601	BREATHER FILTER, DR.HOUSING		1
▲	✖	HOUSING, CONNECTOR WPJ		1
296	2323408	SCREW-#8-32 X 2.0 SHCS SS		7
298	2323410	SCREW-#8-32 X .75 SHCS SS		1
300	2202626	PIN-LATCH, SS		1
302	2322702	SPRING, LATCH PIN SS		2
304	2321702	WASHER-FLAT .375 NYLON		2
306	2263011	E-RING 3/8 DIA. SHAFT*		2
308	✖	HOUSING-STEERING, BTM, SW		1
310	2201910	BRACKET, TILT, SS		1
312	2208601	HOLDER-MAGNET w/CONFORMAL COAT		1
314	✖	MAGNET-.187X.125 NCKL PLT		2
316	2207305	BUSHING, LATCH PIN		2
318	2201730	WASHER-FLAT, .56 ID NYLON	*BLACK*	1
320	2201731	WASHER-FLAT, NYLON	*WHITE*	1
322	2207310	BUSHING,STEERING HSG, PIVOT		2
324	2200100	KNOB, TILT RELEASE		1
326	2383463	SCREW-#6-32 X .625"SET SS		1
328	2202600	PIN-PIVOT,DRIVEHOUSING,SS		1
330	2205906	ADAPTER,STEERING HSG RGHT,WHT		1
332	2205901	ADAPTER,STEERING HSG LEFT,WHT		1
334	2332103	SCREW-#6-20 X 3/8 THD*(SS)		4
336	2203407	SCREW-#6-32 X .625" PFH, SS		1
338	2263011	E-RING 3/8 DIA. SHAFT*		1
340	2052510	CABLE CLAMP, 3/16", NYLON		2
342	2202905	STANDOFF, DAMPENER STEERING SS		1
344	2263006	E-RING,5/16,S/S GAS ASSIST		1

▲ *Not shown on Parts Diagram.*
✖ *This part is included in an assembly and cannot be ordered individually.*
♦ *Only available with models factory installed with i-Pilot.*
● *Only available with models factory installed with i-Pilot Link.*

©2019 Johnson Outdoors Marine Electronics, Inc.

RIPTIDE ULTERRA TRIM HOUSING

Trim Housing Parts Diagram

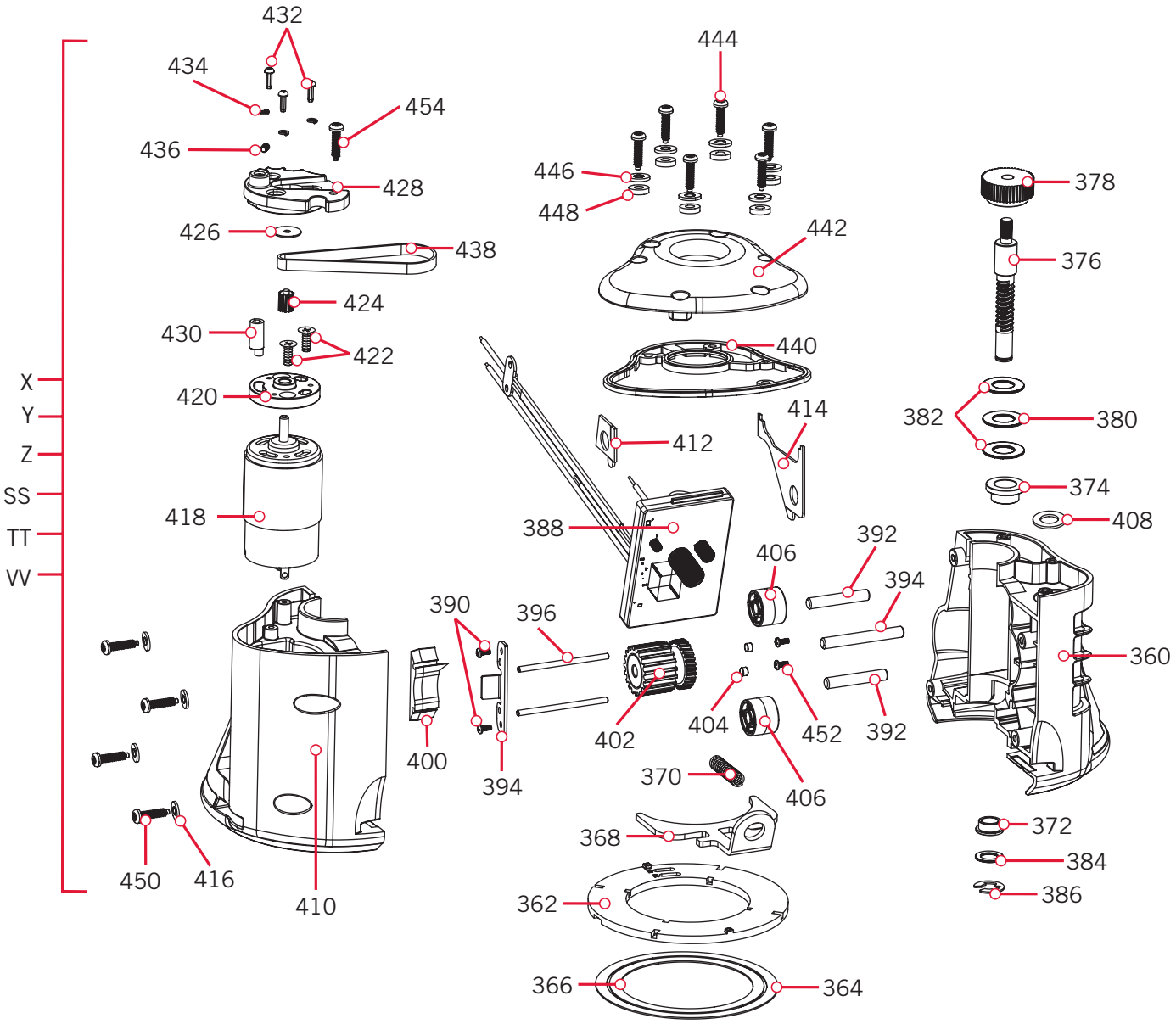

©2019 Johnson Outdoors Marine Electronics, Inc.

Trim Housing Parts List

Assembly	Part #	Description	Notes	Quantity
X	2997825	ASSY,TRIM MOD "M",SW, 72"	*M SKU* *EUROPE ONLY*	1
Y	2997821	ASSY,TRIM MODULE, SW, 72"		1
Z	2997824	ASSY,TRIM MOD "M",SW, 60"	*M SKU* *EUROPE ONLY*	1
SS	2997804	ASSY,TRIM MODULE, SW, 60"		1
TT	2997808	ASSY,TRIM MODULE, SW, 54"		1
VV	2997828	ASSY,TRIM MOD "M",SW, 54"	*M SKU* *EUROPE ONLY*	1
Item	**Part #**	**Description**	**Notes**	**Quantity**
360	✖	HOUSING-TRIM, GEAR SIDE, SW		1
362	✖	CARRIER, SLIPRING CONTACTS		1
364	✖	RING-CONTACT, SLIPRING LARGE		1
366	✖	RING-CONTACT, SLIPRING SMALL		1
368	✖	HANDLE, TRIM HSG RELS, SS		1
370	✖	SPRING-5/16" OD, SS		1
372	✖	BUSHING, TRIM, BOTTOM		1
374	✖	BUSHING-HAT 1/2"SHFT BRNZ		1
376	✖	SHAFT-WORM		1
378	✖	PULLEY, TRIM JACKSHAFT, MACH.		1
380	✖	BEARING-THRUST, NEEDLE		1
382	✖	WASHER-THRUST, 1/2"		2
384	✖	WASHER-THRUST, 3/8"		1
386	✖	E-RING 3/8 DIA. SHAFT*		1
388	✖	BOARD ASSY, WIRELESS TRIM		1
	✖	BOARD ASSY, WIRELESS TRIM "M"	*M SKU EUROPE*	1
390	✖	SCREW-#4-24 X 1/4 PHCR SS TY B		2
392	✖	PIN, BELT PULLEY		2
394	✖	PIN, 2' X 1/4"		1
396	✖	PIN-DOWEL, 1/8"		2
398	✖	BRACKET, DRIVE BLOCK		1
400	✖	BLOCK, TUBE DRIVE		1
402	✖	GEAR/PULLEY-WORM, CLUSTER ASM		1
404	✖	MAGNET-.187X.125 NCKL PLT(N/A)		2
406	2202335	PULLEY, BELT, TOP		2
408	2204603	O-RING, 014-BUNA N, ULTERRA		1
410	✖	HOUSING-TRIM, MOTOR SIDE, SW		1

▲ *Not shown on Parts Diagram.*
✖ *This part is included in an assembly and cannot be ordered individually.*
♦ *Only available with models factory installed with i-Pilot.*
● *Only available with models factory installed with i-Pilot Link.*

©2019 Johnson Outdoors Marine Electronics, Inc.

Item	Part #	Description	Notes	Quantity
412	2206912	GASKET, TRIM HSG ASM, LEFT,WHT		1
414	2206913	GASKET, TRIM HSG ASM, RGHT,WHT		1
416	3394602	WASHER-FLAT #8 SS		4
418	✖	MOTOR, TRIM		1
420	✖	PLATE-ADAPTER, LIFT MOTOR		1
422	✖	SCREW-M4 X 10 PFH, ZP		2
424	✖	PULLEY, LIFT MOTOR, MACHINED		1
426	2201722	WASHER-#6, .625 OD, ZP STEEL		1
428	✖	PLATE-MOTOR		1
430	✖	TENSIONER-BELT		1
432	✖	SCREW-M3-.5 X 10 PPH, ZPS		3
434	✖	LOCKWASHER-SPLIT, 3MM, ZP		3
436	✖	SCREW-SET-#8-32 X 1/4" S/S		1
438	2200810	BELT-TRIM		1
440	2206910	GASKET TOP, TRIM HSG ASM		1
442	2206411	COVER, TRIM HOUSING, SW		1
444	2203401	SCREW-4MM DELTA PT SS		6
446	3391732	WASHER, SEALING		6
448	3394602	WASHER-FLAT #8 SS		6
450	2203401	SCREW-4MM DELTA PT SS		4
452	2373440	SCREW-#4-24 X 1/4 PHCR SS TY B		2
454	2203401	SCREW-4MM DELTA PT SS		1

▲ *Not shown on Parts Diagram.*
✖ *This part is included in an assembly and cannot be ordered individually.*
♦ *Only available with models factory installed with i-Pilot.*
● *Only available with models factory installed with i-Pilot Link.*

©2019 Johnson Outdoors Marine Electronics, Inc.

RIPTIDE ULTERRA MOUNT

Mount Parts Diagram

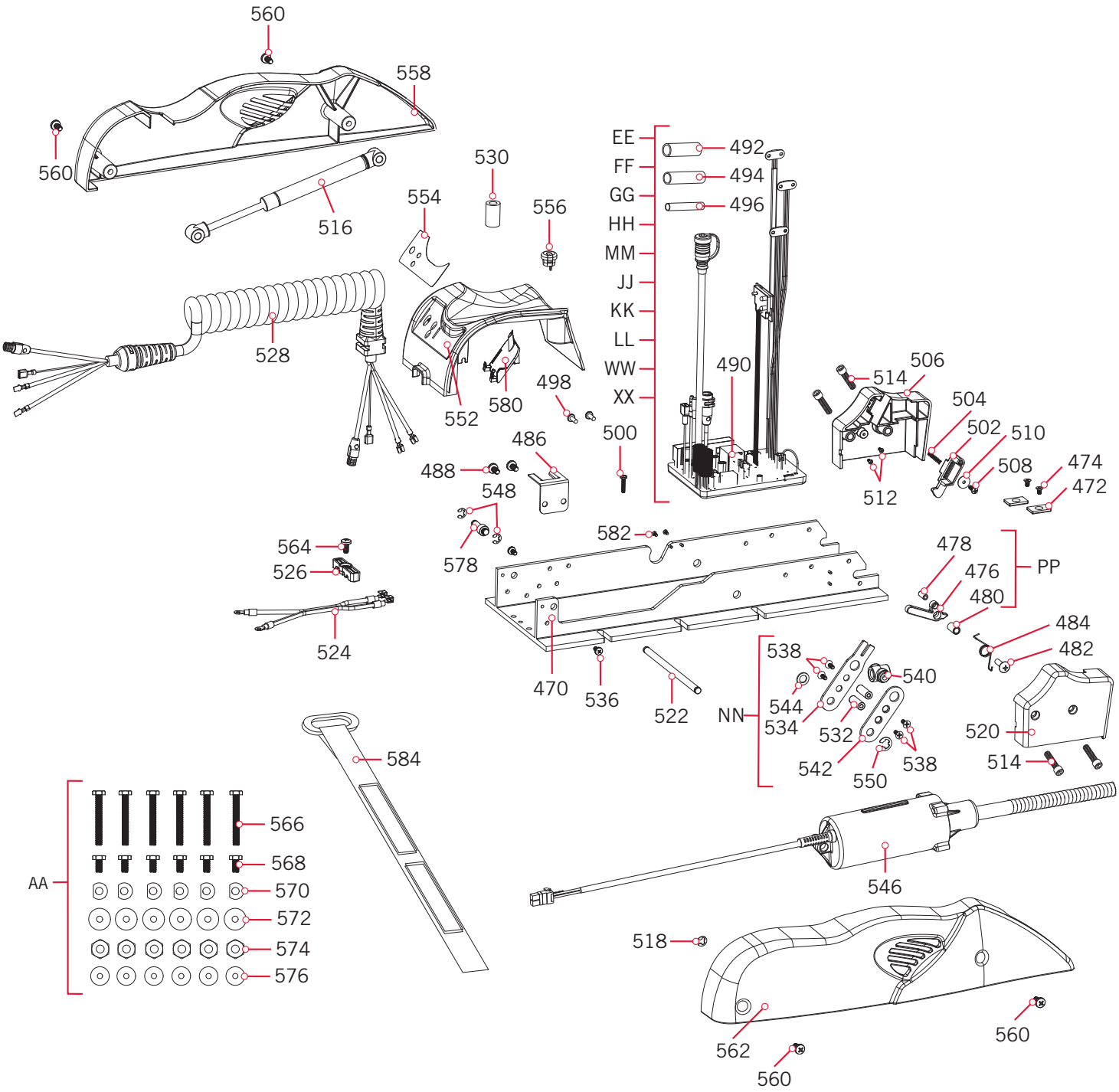

©2019 Johnson Outdoors Marine Electronics, Inc.

Mount Parts List

Assembly	Part #	Description	Notes	Quantity
EE	2774080	MAIN CTRL BD, US/AU/CA, 24V, 60"	*80LB THRUST* *60*	1
FF	2774082	MAIN CTRL BD, US/AU/CA, 36V, 60"	*112LB THRUST* *60*	1
GG	2774084	MAIN CTRL BD, EUR, 24V, 60"	*80LB THRUST* *60* *M SKU EUROPE*	1
HH	2774086	MAIN CTRL BD, EUR, 36V, 60"	*112LB THRUST* *60* *M SKU EUROPE*	1
MM	2774091	MAIN CTRL BD, US/AU/CA, 36V, 72"	*112LB THRUST* *72*	1
JJ	2774090	MAIN CTRL BD, US/AU/CA, 24V, 54"	*80LB THRUST* *54*	1
KK	2774092	MAIN CTRL BD, EUR, 24V, 54"	*80LB THRUST* *54* *M SKU EUROPE*	1
LL	2774093	MAIN CTRL BD, EUR, 36V, 72"	*112LB THRUST* *72* *M SKU EUROPE*	1
WW	2774094	MAIN CTRL BD, US/AU/CA, 24V, 72"	*80LB THRUST* *72* *A SKU*	1
XX	2774096	MAIN CONTROL BRD, EUR, 24V, 72"	*80LB THRUST* *72* *M SKU EUROPE*	1
AA	2994917	BAG ASSY, ULTERRA MTG HARDWARE		1
PP	2777903	CAM MAGNET ASM, ULTERRA		1
NN	2774202	TILT BRACKET ASSEMBLY, SW		1
Item	**Part #**	**Description**	**Notes**	**Quantity**
470	2201902	BASE, MACHINED, SW		1
472	2205105	PAD, STOP		2
474	2203421	SCREW-#10-24X 5/16 PFH SS		2
476	2207903	CAM, PIN SENSOR w/MAGNET SW		1
478	2202627	PIN, CAM SENSOR		1
480	2201702	SPACER, PIN SENSOR		1
482	9280710	HDW SCR 1/4 20X7/8 TRUSS PHIL		1
484	2042711	SPRING-TORSION, SS		1
486	2200820	CLIP-CORD, SS		1
488	2323405	SCREW-1/4-20 X 1/2" MCH SS		2
490	✖	CONTROL BOARD ASSY, MAIN	*ASSEMBLY FF, GG, HH, MM, JJ, KK OR LL*	1
492	2305403	SHRINK TUBE-.500 IDX1.0" ADHSV		4
494	2305415	SHRINK TUBE .472 ADHESIVE LINED		1
496	2305410	SHRINK TUBE-.315 OD X 2.25"		2
498	2323406	SCREW-#10-24 X .50 CRPH SS		2
500	2373487	SCREW-#8-32 X 3/4" PPH MACH SS		1
502	2203701	PLUNGER, RAMP w/CONFORMAL COAT		1
504	2202703	SPRING, PLUNGER-RAMP		1
506	2203917	RAMP-MOTOR, LEFT, 112#	*112 LB THRUST*	1
	2203918	RAMP-MOTOR, LEFT, 80#	*80 LB THRUST*	1
508	2301310	SCREW-#8-18 X 1/2 (SS)*		1

▲ *Not shown on Parts Diagram.*
✖ *This part is included in an assembly and cannot be ordered individually.*
♦ *Only available with models factory installed with i-Pilot.*
● *Only available with models factory installed with i-Pilot Link.*

©2019 Johnson Outdoors Marine Electronics, Inc.

PARTS DIAGRAM & PARTS LIST

Item	Part #	Description	Notes	Quantity
510	2201723	WASHER-#6, .625 OD, SS		1
512	2373440	SCREW-#4-24 X 1/4 PHCR SS TY B		2
514	2263453	SCREW-1/4-20 X 1" SHCS S/S		4
▲	2200825	CLIP, SENSOR CABLE		2
516	2208803	DAMPER, SS, 112#	*112 LB THRUST*	1
	2208801	DAMPER, SS, 80#	*80 LB THRUST*	1
518	2263006	E-RING,5/16,S/S GAS ASSIST		1
520	2203912	RAMP-MOTOR, RIGHT, 112#	*112 LB THRUST*	1
	2203913	RAMP-MOTOR, RIGHT, 80#	*80 LB THRUST*	1
522	2202605	PIN, ACTUATOR, SS		1
524	2090651	LEADWIRE,10 GA,PD		1
526	2321310	STRAIN RELIEF		1
528	2991271	COIL CORD ASY 54/60" NON-US	*54* *60*	1
	2991275	COIL CORD ASY 72" NON-US	*IP 72"*	1
530	2307313	BEAD-FERRITE		1
▲	2256300	TIE WRAP-5.5" BLACK		2
532	2202901	STANDOFF, LIFT ARM		2
534	2204200	ARM-LIFT, INNER, SS		1
536	2383447	SCREW-#10-32 X 3/8" PPH SS		2
538	203410	SCREW-#10-32 X .5"		4
540	2203100	NUT, TILT MOTOR		1
542	2204205	ARM-LIFT, OUTER, SS		1
544	2321702	WASHER-FLAT .375 NYLON		1
546	2997813	ASSEMBLY, TILT MOTOR		1
548	2263006	E-RING,5/16,S/S GAS ASSIST		2
550	2263011	E-RING 3/8 DIA. SHAFT*		1
552	2206511	HOUSING-CONTROL, WHITE		1
554	2205603	DECAL-B.METER/CON/PWR, SW WHT		1
556	2202910	STRAIN RLF,HEYC SR 6N3-4		1
558	2203908	SIDEPLATE, LEFT, SW		1
560	2323405	SCREW-1/4-20 X 1/2" MCH SS		4
562	2203903	SIDEPLATE, RIGHT, SW		1
564	2323405	SCREW-1/4-20 X 1/2" MCH SS		1
▲	2256300	TIE WRAP-5.5" BLACK		1
566	2203430	SCREW-1/4-20 X 2.0 HHCS SS		6
568	2203431	SCREW-1/4-20 X 0.5 HHCS SS		6

▲ *Not shown on Parts Diagram.*
✖ *This part is included in an assembly and cannot be ordered individually.*
♦ *Only available with models factory installed with i-Pilot.*
● *Only available with models factory installed with i-Pilot Link.*

©2019 Johnson Outdoors Marine Electronics, Inc.

Item	Part #	Description	Notes	Quantity
570	2201725	WASHER-CLIPPED, 1/4", 1.00" OD		6
572	2261713	WASHER-1/4 FLAT 18-8 SS		6
574	2263103	NUT-1/4-20 NYLOCK SS		6
576	2301720	WASHER-MOUNTING - RUBBER		6
578	2202903	STANDOFF,OIL DAMPENER,SW		2
580	2200823	CLIP, POWER BUTTON		1
582	2203440	SCREW-#4-40 X 1/4 PPH SS		4
584	2203801	STRAP, HOLD DOWN		1

▲ *Not shown on Parts Diagram.*
✖ *This part is included in an assembly and cannot be ordered individually.*
♦ *Only available with models factory installed with i-Pilot.*
● *Only available with models factory installed with i-Pilot Link.*

©2019 Johnson Outdoors Marine Electronics, Inc.