PARTS DIAGRAM

RIPTIDE ULTERRA

80/112 LBS THRUST - 24/36 VOLT - 54”/60”/72” SHAFT

This page provides Minn Kota® WEEE compliance disassembly instructions. For more information about where you should dispose of your waste equipment for recycling and recovery and/or your European Union member state requirements, please contact your dealer or distributor from which your product was purchased. Tools required, but not limited to: flat head screw driver, Phillips screw driver, socket set, pliers, wire cutters.

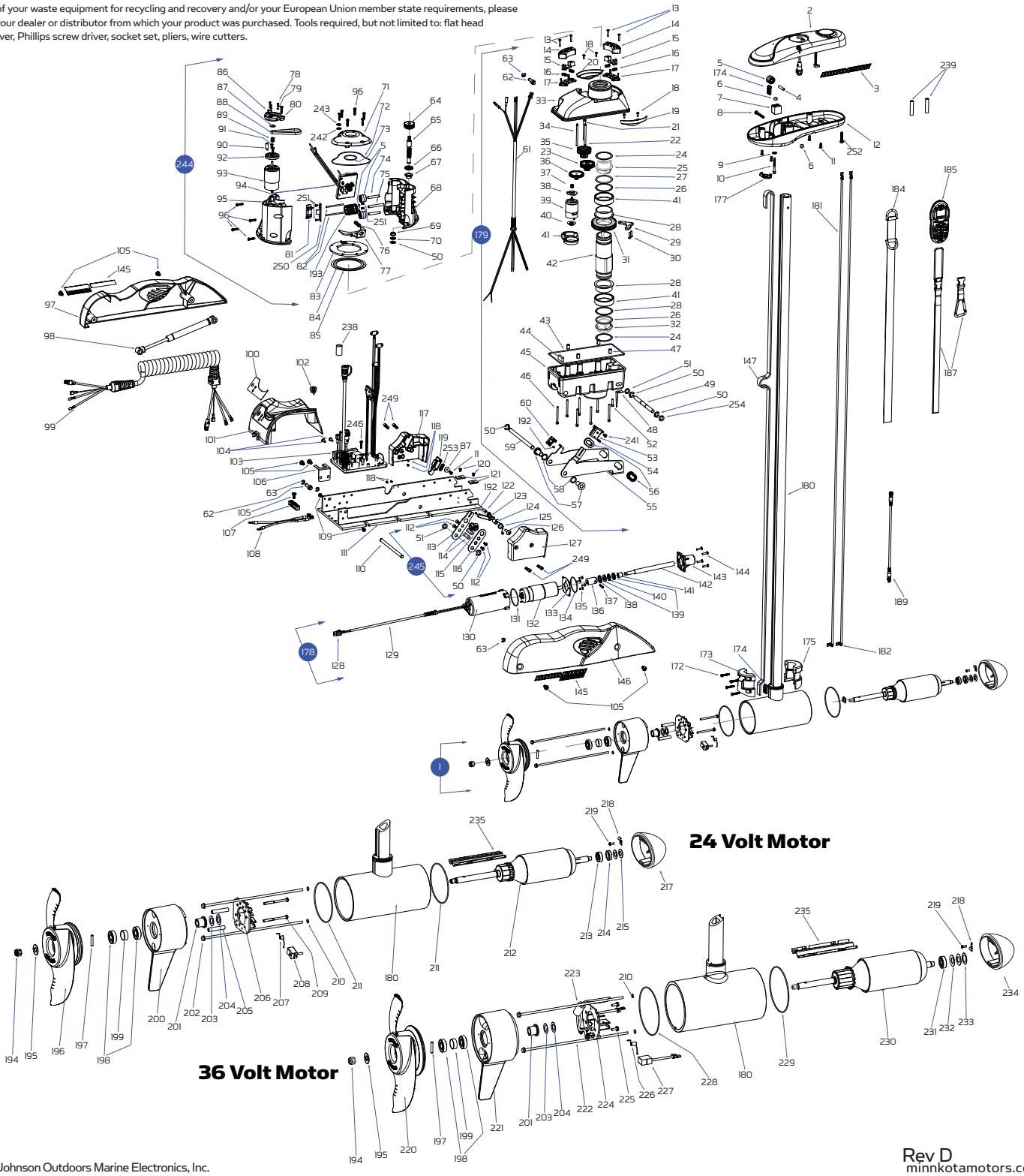

©2015 Johnson Outdoors Marine Electronics, Inc.

PARTS LIST

RIPTIDE ULTERRA

80/112 LBS THRUST - 24/36 VOLT - 54”/60”/72” SHAFT

ITEM	QTY	PART NUMBER	DESCRIPTION
1	1	2777030	24 V MOTOR 54" SW
	1	2777031	24 V MOTOR 60" SW
	1	2777032	24 V MOTOR 54" SW, "M" (EUROPE)
	1	2777033	24 V MOTOR 60" SW "M" (EUROPE)
	1	2777092	36 V MOTOR 60" SW
	1	2777094	36 V MOTOR 72" SW
2	1	2990209	HEAD ASSY, SW, IPILOT 1.5
3	2	2205513	DECAL, CONTROL BOX SIDE, SW
4	1	2202635	PIN-DOWEL, 1/4" OD SS
5	3	2202335	PULLEY, BELT, TOP
6	2	2333101	NUT-HEX #10-24
7	1	2202800	BLOCK, BELT
8	1	2332102	SCREW-#10-24 X 1-3/4
9	1	2201721	WASHER, #10 SAE, SS
10	1	2203411	SCREW-#10-24, SHCS, SS
11	6	2372100	SCREW, #8-18 X 5/8 THD
12	1	2202507	CONTROL BOX BOTTOM, SW
13	4	2203406	SCREW, #6-32 X 0.75 PPH, SS
14	2	*	BLOCK-BRUSH, SLIPRING
15	2	*	BRUSH SHUNT ASSY
16	4	*	SPRING COMPRESSION, BRUSH
17	2	*	INSULATOR, BLOCK-BRUSH
18	4	2332103	SCREW-#6-20 X 3/8 THD, SS
19	1	2205906	RIGHT STEERING ADAPTER, SW
20	1	2205901	LEFT STEERING ADAPTER, SW
21	1	2302615	SHAFT-GEAR, INTERMED. CLUSTER
22	1	2302620	SHAFT-GEAR, THIRD CLUSTER
23	1	2302250	GEAR & PINION, DR. HSG, STAGE 3
24	2	2321704	WASHER-THRUST, STEERING
25	1	2201510	COLLAR-DRIVE, OUTPUT TUBE
26	2	2324608	O-RING, 224, PD PRO STEERING HOUSING
27	2	2321720	SHIM, O-RING
28	2	2327314	BUSHING, PRO STEERING SW
29	1	2201920	BRACKET-SENSOR, STEERING HSG
30	2	2303412	SCREW-#6-20 X 5/8 SELF TAP
31	1	2772200	GEAR-OUTPUT
32	1	2321510	COLLAR-DRIVE, BOTTOM
33	1	*	WHITE STEERING HSG COVER, SW
34	1	*	SHAFT-GEAR, FIRST CLUSTER
35	1	2302255	GEAR & PINION, STAGE 4
36	1	2302245	GEAR & PINION, STAGE 2
37	1	2302240	GEAR & PINION, STAGE 1
38	1	*	CAP, MOTOR BOTTOM
39	1	*	MOTOR-STEERING PD/AP 36V
	1	*	MOTOR-STEERING PD/AP 24V
40	1	*	CAP, MOTOR TOP
41	1	2327315	BUSHING, ALUMIN. SPACER ST
42	1	2322031	TUBE-OUTPUT, SALTWATER
43	1	2324604	O-RING, CASE SEAL
44	1	2308601	BREATHER FILTER, DR. HSG
45	1	*	STEERING HSG, BTTM, WHITE
46	7	2323408	SCREW-#8-32 X 2.0 SHCS SS
47	4	*	PIN-ROLL 5/16" X 1/2"
48	2	2322702	SPRING, LATCH PIN SS
49	1	2202626	PIN-LATCH

ITEM	QTY	PART NUMBER	DESCRIPTION
50	5	2263011	E-RING 3/8 DIA. SHAFT
51	3	2321702	WASHER-FLAT .375 NYLON
52	1	2323410	SCREW-#8-32 X .75 SHCS SS
53	1	2770100	KNOB, TILT RELEASE
54	1	*	SCREW-#6-32 X .625" SET SS
55	1	2201910	BRACKET, TILT, SS
56	2	2207305	BUSHING, LATCH PIN
57	2	2207310	BUSHING, STRG HSG PIVOT
58	2	2201730	WASHER-FLAT, .56 ID NYLON
59	1	2202601	PIN-PIVOT, DRIVE HOUSING, SS
60	1	2208601	HOLDER-MAGNET
61	1	*	LEADWIRE, STEERING MTR, 8 COND.
62	2	2202903	STANDOFF, OIL DAMPENER, SS
63	2	2263006	E-CLIP, 5/16
64	1	*	PULLEY, TRIM JACKSHAFT
65	1	*	WORM SHAFT ASSY W/ PULLEY
66	1	*	BEARING-THRUST, NEEDLE
67	1	*	BUSHING, TRIM, TOP
68	1	*	HOUSING-TRIM, GEAR SIDE
69	1	*	BUSHING, TRIM, BOTTOM
70	1	*	WASHER-THRUST, 3/8"
71	1	2206410	COVER, TRIM HOUSING
72	1	2204601	O-RING, TRIM HOUSING
73	1	2204600	O-RING, TRIM HSG COVER
74	2	*	PIN, BELT PULLEY
75	1	*	PIN, 2"X1/4"
76	1	*	SPRING, 5/16" OD, SS
77	1	*	HANDLE, TRIM HSG RELS, SS
78	3	2053422	SCREW-M3-.5 X 10 PPH, ZP
79	3	2051710	LOCKWASHER-SPLIT, 3MM, ZP
80	1	2206400	PLATE, MOTOR
81	1	2202825	BLOCK, TUBE DRIVE
82	2	2202636	PIN-DOWEL, 1/8"
83	1	2208620	CARRIER, SLIPRING CONTACTS
84	1	*	CONTACT, SLIPRING SMALL
85	1	*	CONTACT, SLIPRING LARGE
86	1	2053420	SCREW-SET-#8-32 X 1/4" SS
87	1	*	WASHER-#6, .625 OD
88	1	2200810	BELT-TRIM
89	1	*	PULLEY, LIFT MOTOR, MACHINED
90	1	2058411	TENSIONER-BELT
91	2	*	SCREW-M4 X 10 PFH, ZP
92	1	*	PLATE-ADAPTER, LIFT MOTOR
93	1	*	MOTOR, TRIM
94	1	*	BOARD ASSY, WIRELESS TRIM
	1	*	BOARD ASSY, WIRELESS TRIM (EUROPE)
95	1	*	HOUSING-TRIM, MOTOR SIDE, WHITE
96	11	3393481	SCREW, #10X.75 HI-LO, SS, PPH
97	1	2203906	SIDEPLATE, LEFT, WHITE
98	1	2208801	DAMPER, HYBRID, 80#, SS
	1	2208803	DAMPER, HYBRID, 112#, SS
99	1	2991271	COIL CORD ASSY 54/60"
	1	2991275	COIL CORD 72"
100	1	2205601	DECAL, B. METER/CON/PWR SW WHITE
101	1	2206511	HOUSING-CONTROL, WHITE

*Item is part of an assembly and is listed for reference only. Item cannot be ordered seperately. Refer to “Service Kits” section for kit part number.
†This is a service kit and includes multiple parts. Refer to “Service Kits” section for complete part listing.

©2015 Johnson Outdoors Marine Electronics, Inc.

RIPTIDE ULTERRA

80/112 LBS THRUST - 24/36 VOLT - 54”/60”/72” SHAFT

ITEM	QTY	PART NUMBER	DESCRIPTION
102	1	2202910	STRAIN RLF, HEYCO SR 6N3-4
103	1	2774080	MAIN CONTROL BOARD, 24V, 60", N AMERICA
		2774090	MAIN CONTROL BOARD, 24V, 54", N AMERICA
		2774082	MAIN CONTROL BOARD, 36V, 60", N AMERICA
		2774091	MAIN CONTROL BOARD, 36V, 72", N AMERICA
		2774084	MAIN CONTROL BOARD, 24V, 60", EUROPE
		2774092	MAIN CONTROL BOARD, 24V, 54", EUROPE
		2774086	MAIN CONTROL BOARD, 36V, 60", EUROPE
		2774093	MAIN CONTROL BOARD, 36V, 72", EUROPE
104	2	2323406	SCREW-#10-24 X .50 CRPH SS
105	7	2323405	SCREW-1/4-20 X 1/2" T-L SS
106	1	2200820	CLIP-CORD, SS
107	1	2321310	STRAIN RELIEF
108	1	2090651	LEADWIRE, 10 GA
109	2	2383447	SCREW-#10-32 X 3/8" PPH SS
110	1	2202605	PIN, ACTUATOR, SS
111	1	2201902	BASE, MACHINED, SW
112†	4	2203410	SCREW #10-32 X .5"
113†	1	2204200	ARM-LIFT, INNER, SS
114	2	2202901	STANDOFF, LIFT ARM
115	1	2203100	NUT, TILT MOTOR
116†	1	2204205	ARM-LIFT, OUTER, SS
117	1	2203916	RAMP-MOTOR, LEFT 80#
	1	2203915	RAMP-MOTOR, LEFT 112#
118	10	2373440	SCREW-#4-24 X 1/4 PHCR SS TY B
119	1	2203701	PLUNGER, RAMP
120	2	2203420	SCREW #10-24 X 5/16 PFH
121	2	2205105	PAD, STOP
122	1	2262632	PIN-SPRING 1/4" X 5/8" SS
123	1	2207901	CAM, PIN SENSOR
124	1	2201702	SPACER, PIN SENSOR
125	1	2042711	SPRING-TORSION, SS
126	1	9280710	HDW SCR 1/4 - 20 X 7/8 TRUSS PHIL
127	1	2203911	RAMP-MOTOR, RIGHT, 80#
		2203910	RAMP-MOTOR, RIGHT, 112#
128	1	*	HOUSING, CONNECTOR WPJ
129	1	*	LEADWIRE, TILT MOTOR
130	1	*	COVER, TILT ACTUATOR
131	1	*	O-RING, TILT, LARGE
132	1	*	MOTOR, STOW/DEPLOY
133	1	*	MOUNTING PLATE, TILT MOTOR
134	1	*	O-RING, TILT, SMALL
135	4	*	SCREW-M4 X 8, SS
136	1	*	COUPLER, STW/DPLY ACTUATOR
137	1	*	SPRING PIN, 5MM X 20MM
138	1	*	SEAL, TILT MOTOR
139	2	*	WASHER-THRUST, TILT MOTOR
140	1	*	BEARING-THRUST, TILT MOTOR
141	1	*	SPACER, SHAFT
142	1	*	SHAFT, STOW/DEPLOY, SS
143	1	*	COVER-NOSE, TILT ACTUATOR
144	4	*	SCREW-#8-18 X 5/8" PPH
145	2	2205512	DECAL, SIDEPLATE, SW
146	1	2203901	SIDEPLATE, RIGHT, WHITE
147	1	2770817	BELT-LIFT 54”
		2770818	BELT-LIFT 60”
		2770819	BELT-LIFT 72”
172	4	3393480	SCREW-#10 X 1.0" PPH HI-LO SS
173	1	2201505	COLLAR, BELT CLAMP
174	2	2200800	BELT-RACK, LOWER
175	1	2201500	COLLAR, CLAMP
177	1	2224703	PLUG INSERT, WHITE (I-PILOT)
178†	1	2997813	TILT MOTOR ASSY

ITEM	QTY	PART NUMBER	DESCRIPTION
179†	1	2776506	STEERING HOUSING ASSY 24 V, SW
	1	2776504	STEERING HOUSING ASSY 36 V, SW
180	1	2777392	CTR HSG ASSY, CB, 80#, SW, W/TUBE, 54"
	1	2777393	CTR HSG ASSY, CB, 80#, SW, W/TUBE, 60"
	1	2777394	CTR HSG ASSY, CB, 80#, SW, W/TUBE, 54", "M"
	1	2777395	CTR HSG ASSY, CB, 80#, SW, W/TUBE, 60", "M"
	1	2777347	CTR HSG ASSY, CB, 112#, SW, W/TUBE, 60"
	1	2777348	CTR HSG ASSY, CB, 112#, SW, W/TUBE, 72"
181	1	640-133	MOTOR WIRE, RED, 80#, 54"
	1	640-126	MOTOR WIRE, RED, 80#, 60"
	1	640-135	MOTOR WIRE, RED, 112#, 60"
	1	640-149	MOTOR WIRE, RED, 112#, 72"
182	1	640-025	MOTOR WIRE, BLACK, 80#, 54"
	1	640-022	MOTOR WIRE, BLACK, 80#, 60"
	1	640-045	MOTOR WIRE, BLACK, 112#, 60"
	1	640-049	MOTOR WIRE, BLACK, 112#, 72"
184	1	2203800	STRAP, EMERGENCY
185	1	2994171	REMOTE ASSY, IPILOT 1.5
187	1	2370817	LANYARD, REMOTE W/ CARABEENER
189	1	2211415	CABLE-EXTENSION, PD/AP 110"
192	9	*	.187 X .125 MAGNET
193	1	*	GEAR/PULLEY-WORM CLUSTER ASSY
194	1	2198401	NUT, ANODE, NYLOCK, PROP, LARGE
195	1	2091701	WASHER-PROP
196	1	2331160	PROP-WW2, 80#
197	1	2262658	PIN-DRIVE 1" X 3/16" SS
198	2	880-025	SEAL
199	1	725-095	PAPER TUBE, SEAL
200	1	92-300-370	BRUSH END HSG, 80#, SW
201	1	144-017	BEARING, FLANGE
202	2	830-094	THRU BOLT 12-24
203	1	990-052	WASHER, NYLATRON
204	1	990-051	WASHER-STEEL THRUST
205	2	973-025	SPACER, BRUSHPLATE
206	1	9-738-015	BRUSH PLATE ASSY, 4"
207	2	975-041	SPRING-TORSION
208	2	186-094	BRUSH 4"
209	2	830-027	SCREW-BRUSH PLATE 10-32
210	2	701-009	O-RING, THRU BOLTS
211	2	701-043	O-RING, END HOUSINGS
212	1	2-100-214	ARMATURE ASSY
213	1	140-010	BEARING - BALL
214	1	990-045	SPACER, THRUST
215	2	992-010	WASHER, SPRING BELLEVILLE
217	1	421-376	PLAIN END HOUSING, ASSY 80# SW
220	1	2341160	PROP-WW2, 112#
221	1	92-300-156	BRUSH END HSG, 112#, SW
222	2	830-094	THRU BOLT 12-24
223	1	2307312	BEAD-FERRITE
224	1	9-738-011	BRUSH PLATE ASSY, 4.5"
225	2	2053410	SCREW-BRUSH PLATE, 10-32
226	2	975-045	SPRING-TORSION
227	2	188-095	BRUSH, 4.5" LU
228	1	701-103	O-RING, BRUSH END
229	1	701-098	O-RING, PLAIN END
230	1	2-100-245	ARMATURE ASSY
231	1	140-014	BEARING - BALL
232	2	992-011	WASHER, SPRING BELLEVILLE
233	1	990-011	WASHER, SHIM
234	1	421-241	PLAIN END HOUSING, ASSY 112# SW
235	1	582-013	CLIP, RETAINING SHORT
236	1	582-016	CLIP-RETAINING, SONAR
238	1	2307313	FERRITE BEAD

*Item is part of an assembly and is listed for reference only. Item cannot be ordered seperately. Refer to “Service Kits” section for kit part number.
†This is a service kit and includes multiple parts. Refer to “Service Kits” section for complete part listing.

©2015 Johnson Outdoors Marine Electronics, Inc.

RIPTIDE ULTERRA

80/112 LBS THRUST - 24/36 VOLT - 54”/60”/72” SHAFT

ITEM	QTY	PART NUMBER	DESCRIPTION
239	2	2305402	SHRINK TUBE .374 ID X 2.25" LONG
241	1	2203407	SCREW, #6-32 X .5
242	6	3391732	SEALING WASHER
243	6	3394602	FLAT WASHER #8
244†	1	2997808	TRIM HOUSING ASSEMBLY - 54”
	1	2997804	TRIM HOUSING ASSEMBLY - 60”
	1	2997821	TRIM HOUSING ASSEMBLY - 72”
	1	2997828	TRIM HOUSING ASSEMBLY - 54” (EUROPE)

ITEM	QTY	PART NUMBER	DESCRIPTION
	1	2997824	TRIM HOUSING ASSEMBLY - 60” (EUROPE)
	1	2997825	TRIM HOUSING ASSEMBLY - 72” (EUROPE)
245†	1	2774202	TILT BRACKET ASSEMBLY
246	1	2373487	SCREW-#8-32 X 3/4
249	4	2263453	SCREW, 1/4-20x1" SHCS S/S
250	1	*	DRIVE BLOCK BRACKET
251	4	*	SCREW-#4-24 X 1/4" PHCR SS
252	1	2203403	SCREW-#6 X 1" BRASS HI-LO
253	1	2202703	SPRING, PLUNGER RAMP
254	1	2201731	WASHER-FLAT, NYLON, WHITE

*Item is part of an assembly and is listed for reference only. Item cannot be ordered seperately. Refer to “Service Kits” section for kit part number.
†This assembly includes multiple parts. Refer to “Service Kits” section for complete part listing.

SERVICE KITS & ASSEMBLIES

DESCRIPTION	KIT ITEM NO.	PART NO.	ITEM NUMBER INCLUDED / QUANTITY
TILT MOTOR ASSY	178	2997813	128 (1), 129 (1), 130 (1), 131 (1), 132 (1), 133 (1), 134 (1), 135 (1), 136 (1), 137 (1), 138 (1), 139 (1), 140 (1), 141 (1), 142 (1), 143 (1), 144 (1)
OUTPUT GEAR W/ MAGNETS		2772200	31 (1), 192 (4)
STEERING HOUSING ASSY, 24V	179	2776506	13 (4), 14 (2), 15 (2), 16 (4), 17 (2), 18 (4), 19 (1), 20 (1), 21 (1), 22 (1), 23 (1), 24 (2), 25 (1), 26 (2), 27 (2), 28 (2), 29 (1), 30 (2), 31 (1), 32 (1), 33 (1), 34 (1), 35 (1), 36 (1), 37 (1), 38 (1), 39 (1), 40 (1), 41 (1), 42 (1), 43 (1), 44 (1), 45 (1), 46 (7), 47 (4), 48 (2), 49 (1), 50 (3), 51 (2), 52 (1), 53 (1), 54 (1), 55 (1), 56 (2), 57 (2), 58 (2), 59 (1), 61 (1), 62 (1), 63 (1), 192 (1), 241 (1)
STEERING HOUSING ASSY, 36V	179	2776504	13 (4), 14 (2), 15 (2), 16 (4), 17 (2), 18 (4), 19 (1), 20 (1), 21 (1), 22 (1), 23 (1), 24 (2), 25 (1), 26 (2), 27 (2), 28 (2), 29 (1), 30 (2), 31 (1), 32 (1), 33 (1), 34 (1), 35 (1), 36 (1), 37 (1), 38 (2), 39 (2), 40 (2), 41 (1), 42 (1), 43 (1), 44 (1), 45 (1), 46 (7), 47 (4), 48 (2), 49 (1), 50 (3), 51 (2), 52 (1), 53 (1), 54 (1), 55 (1), 56 (2), 57 (2), 58 (2), 59 (1), 61 (1), 62 (1), 63 (1), 192 (1), 241 (1)
CAM W/ MAGNET AND SPRING PIN		2777901	122 (1), 123 (1), 192 (1)
RELEASE KNOB W/ SCREW		2770100	53 (1), 54 (1), 241 (1)
SENSOR WIRE W/ BUTT CONNECTORS		2880350	
MOUNTING BAG		2994917	
TRIM HOUSING ASSEMBLY - 54”	244	2997808	5 (2), 50 (1), 64 (1), 65 (1), 66 (1), 67 (1), 68 (1), 69 (1), 70 (1), 71 (1), 72 (1), 73 (1), 74 (2), 75 (1), 76 (1), 77 (1), 78 (1), 79 (1), 80 (1), 81 (1), 82 (1), 83 (1), 84 (1), 85 (1), 86 (1), 87 (1), 88 (1), 89 (1), 90(1), 91 (1), 92 (1), 93 (1), 94 (1), 95 (1), 96 (10), 193 (1), 242 (1), 243 (1), 250 (1), 251 (4)
TRIM HOUSING ASSEMBLY - 60”	244	2997804	5 (2), 50 (1), 64 (1), 65 (1), 66 (1), 67 (1), 68 (1), 69 (1), 70 (1), 71 (1), 72 (1), 73 (1), 74 (2), 75 (1), 76 (1), 77 (1), 78 (1), 79 (1), 80 (1), 81 (1), 82 (1), 83 (1), 84 (1), 85 (1), 86 (1), 87 (1), 88 (1), 89 (1), 90(1), 91 (1), 92 (1), 93 (1), 94 (1), 95 (1), 96 (10), 193 (1), 242 (1), 243 (1), 250 (1), 251 (4)
TRIM HOUSING ASSEMBLY - 72”	244	2997821	5 (2), 50 (1), 64 (1), 65 (1), 66 (1), 67 (1), 68 (1), 69 (1), 70 (1), 71 (1), 72 (1), 73 (1), 74 (2), 75 (1), 76 (1), 77 (1), 78 (1), 79 (1), 80 (1), 81 (1), 82 (1), 83 (1), 84 (1), 85 (1), 86 (1), 87 (1), 88 (1), 89 (1), 90(1), 91 (1), 92 (1), 93 (1), 94 (1), 95 (1), 96 (10), 193 (1), 242 (1), 243 (1), 250 (1), 251 (4)
TRIM HOUSING ASSEMBLY - 54” (EUROPE)	244	2997828	5 (2), 50 (1), 64 (1), 65 (1), 66 (1), 67 (1), 68 (1), 69 (1), 70 (1), 71 (1), 72 (1), 73 (1), 74 (2), 75 (1), 76 (1), 77 (1), 78 (1), 79 (1), 80 (1), 81 (1), 82 (1), 83 (1), 84 (1), 85 (1), 86 (1), 87 (1), 88 (1), 89 (1), 90(1), 91 (1), 92 (1), 93 (1), 94 (1), 95 (1), 96 (10), 193 (1), 242 (1), 243 (1), 250 (1), 251 (4)
TRIM HOUSING ASSEMBLY - 60" (EUROPE)	244	2997824	5 (2), 50 (1), 64 (1), 65 (1), 66 (1), 67 (1), 68 (1), 69 (1), 70 (1), 71 (1), 72 (1), 73 (1), 74 (2), 75 (1), 76 (1), 77 (1), 78 (1), 79 (1), 80 (1), 81 (1), 82 (1), 83 (1), 84 (1), 85 (1), 86 (1), 87 (1), 88 (1), 89 (1), 90(1), 91 (1), 92 (1), 93 (1), 94 (1), 95 (1), 96 (10), 193 (1), 242 (1), 243 (1), 250 (1), 251 (4)
TRIM HOUSING ASSEMBLY - 72" (EUROPE)	244	2997825	5 (2), 50 (1), 64 (1), 65 (1), 66 (1), 67 (1), 68 (1), 69 (1), 70 (1), 71 (1), 72 (1), 73 (1), 74 (2), 75 (1), 76 (1), 77 (1), 78 (1), 79 (1), 80 (1), 81 (1), 82 (1), 83 (1), 84 (1), 85 (1), 86 (1), 87 (1), 88 (1), 89 (1), 90(1), 91 (1), 92 (1), 93 (1), 94 (1), 95 (1), 96 (10), 193 (1), 242 (1), 243 (1), 250 (1), 251 (4)
TILT BRACKET ASSY	245	2774202	50 (1), 51 (1), 112 (4), 113 (1), 114 (2), 115 (1), 116 (1)

©2015 Johnson Outdoors Marine Electronics, Inc.