PARTS DIAGRAM & PARTS LIST

RIPTIDE MAXXUM 80 - 80 LBS THRUST - 24 VOLT - 52”/62” SHAFT

The parts diagram and parts list provides Minn Kota® WEEE compliance disassembly instructions. For more information about where you should dispose of your waste equipment for recycling and recovery and/or your European Union member state requirements, please contact your dealer or distributor from which your product was purchased. Tools required, but not limited to: flat head screwdriver, Phillips screwdriver, socket set, pliers, wire cutters.

RIPTIDE MAXXUM 80 CONTROL HEAD

Control Head Parts Diagram

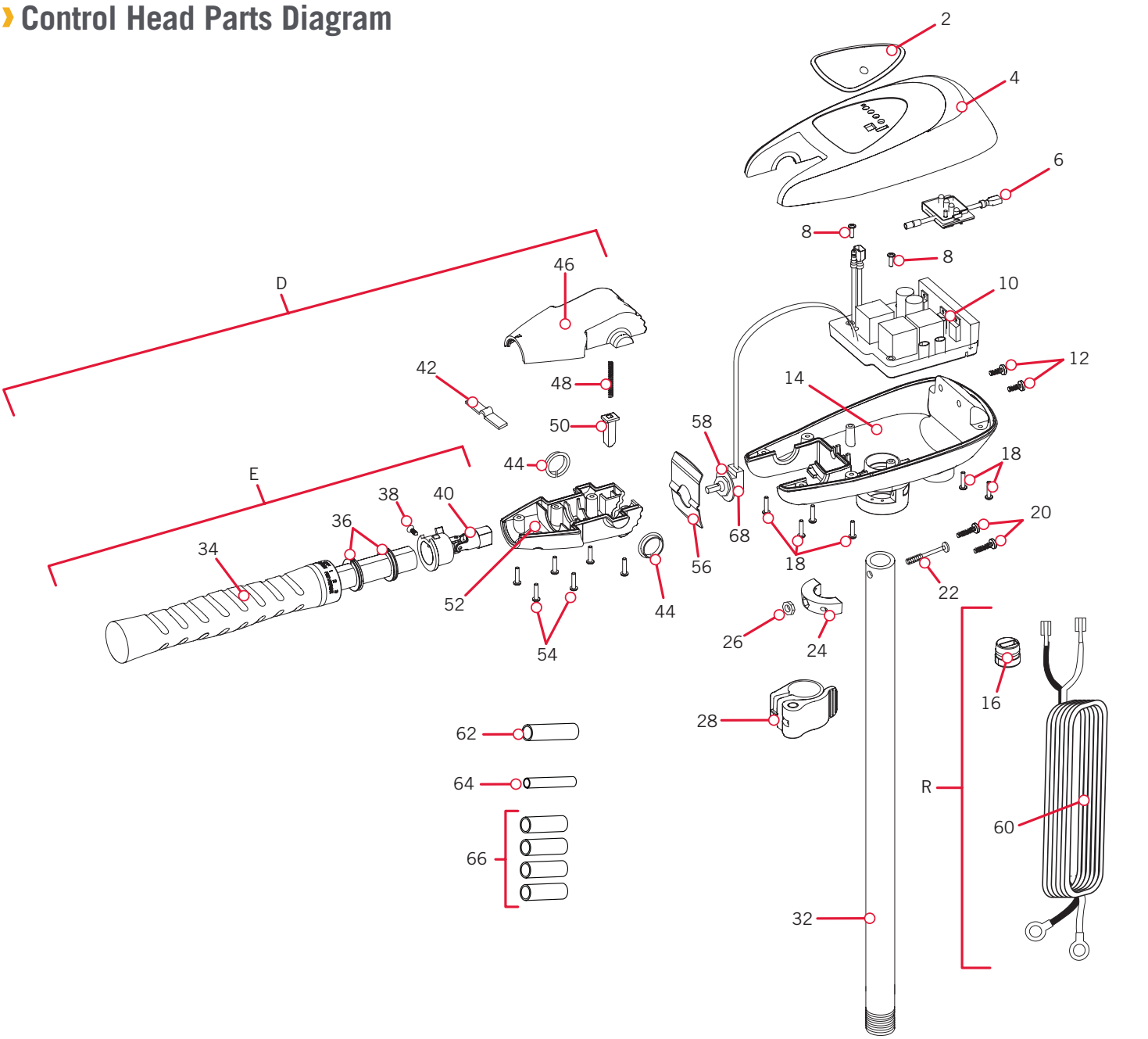

Part #2194952 ECN 41447 Rev L 01/21

©2021 Johnson Outdoors Marine Electronics, Inc.

Control Head Parts List

Assembly	Part #	Description	Notes	Quantity
D	2990468	HANDLE ASM, VAR SPD, FW/SW	*52"* *62"*	1
E	2990466	HANDLE ASM, VAR.SPEED, TRAXXIS		1
R	2992521	LEADWIRE ASSY-HC BOW VAR 96		1
Item	**Part #**	**Description**	**Notes**	**Quantity**
2	2195667	DECAL-COVER, RT80 SM, SF, T		1
4	2060299	COVER CONTROL BOX TRAXXIS SW		1
6	2074081	BATTERY METER, 24V, SW		1
8	2043427	SCREW-#8 X 7/8 PPH TY BT SS		2
10	2184027	CTRL BRD ASY,24/36V TRXX		1
12	2303434	SCREW-#8-32 X 5/8 MACH PHCR SS		2
14	2062538	CONTROL BOX, CAST, SW		1
16	2062905	STRAIN RELIEF,HEYCO 1876		1
18	2303412	SCREW-#6-20 X 5/8 SELF TAP		6
20	2063410	SCREW-#10-32 X 3/4" CAP SS		2
22	2093400	SCREW-#10-24 X 1-7/8 PPH SS		1
24	2061529	COLLAR-CTRL BOX (SW)		1
26	2333101	NUT-HEX #10-24 UNC-2B NYL SS		1
28	2991521	CAM LOCK/DEPTH COLLAR ASY		1
30	2068411	POTENTIOMETER ASSY		1
32	2002014	TUBE (COMPOSITE) 52" WHITE	*52"*	1
	2002015	TUBE (COMPOSITE) 62" WHITE	*62"*	1
34	2060465	GRIP-HANDLE, RAW, TRAXXIS		1
36	2060015	BEARING, HANDLE 2990455		2
38	2063405	SCREW-#6 X 1/2" PFH SS TY AB		1
40	2994092	YOKE ASY,VAR.2990455		1
42	2302742	SPRING-DETENT(OFF) (SS)		1
44	2060005	BEARING-HANDLE PIVOT		2
46	2060900	PIVOT HANDLE, TOP		1
48	2302745	SPRING-RELEASE BUTTON (SS		1
50	2063700	BUTTON-RELEASE		1
52	2060905	PIVOT HANDLE, BTTM		1
54	2303412	SCREW-#6-20 X 5/8 SELF TAP		6
56	2062715	SPRING, DETENT, HANDLE TILT		1
58	2061700	WASHER, POT HOLDER		1
60	2090650	LEADWIRE (10 GA) MAX/AT HAND		1
62	2305415	SHRINK TUBE-.472 ID X 2.25"		1

▲ *Not shown on Parts Diagram.*

✖ *This part is included in an assembly and cannot be ordered individually.*

©2021 Johnson Outdoors Marine Electronics, Inc.

Item	Part #	Description	Notes	Quantity
64	2305410	SHRINK TUBE-.315 OD X 2.25"		1
66	2305403	SHRINK TUBE-.500 IDX1.0" ADHSV		4
68	2888411	POTENTIOMETER ASSY		1
▲	2197117	MANUAL-RT/SM		1
▲	2194952	PARTS LIST-RT80/SM/BG-52"		1
▲	2015800	HANG TAG "CAUTION..TILT HINGE"		1

▲ *Not shown on Parts Diagram.*

✖ *This part is included in an assembly and cannot be ordered individually.*

©2021 Johnson Outdoors Marine Electronics, Inc.

RIPTIDE MAXXUM 80 MOTOR

Motor Parts Diagram

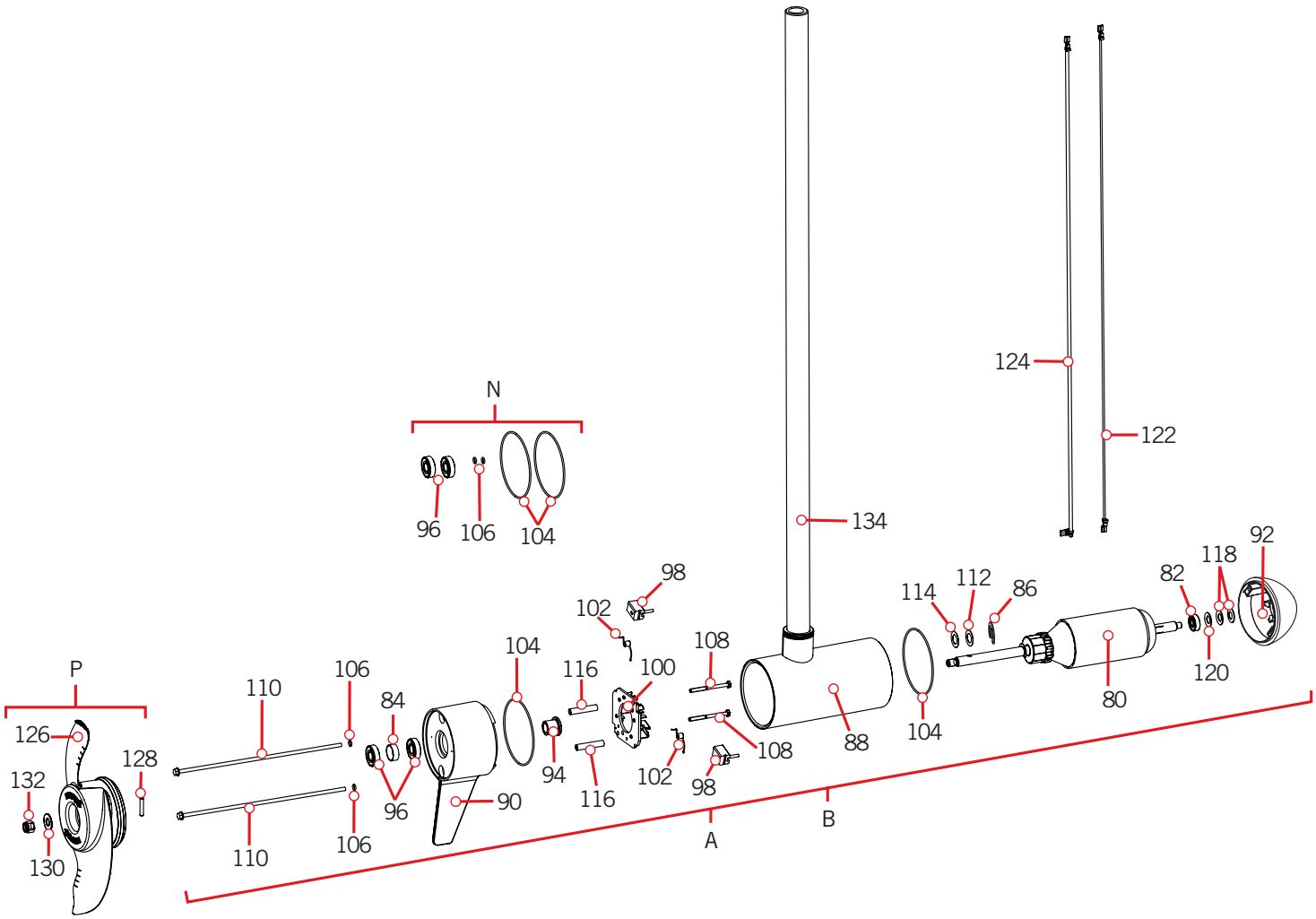

©2021 Johnson Outdoors Marine Electronics, Inc.

Motor Parts List

Assembly	Part #	Description	Notes	Quantity
A	2316225	MTR ASY 24V 4" VS 80# SW BS	*52"*	1
B	2316222	MTR ASY 24V 4" VS 80# SW BS	*62"*	1
N	2889460	SEAL & O-RING KIT		1
P	1378132	PROP IND 2331160 WDLS WDG II		1
Item	**Part #**	**Description**	**Notes**	**Quantity**
80	2-100-214	ARM ASSY 24V 4" 80# (WW2)		1
82	140-010	BEARING - BALL		1
84	725-095	PAPER TUBE - SEAL BORE		1
86	788-040	RETAINING RING		1
88	2-200-394	CTR HSG ASM 4.0" SW MAGNETIZED		1
90	2-300-340	BRUSH END HSG ASY SW TX/W		1
92	421-376	HSG PLN END 4" SW WHT BS		1
94	144-017	BEARING - FLANGE		1
96	880-025	SEAL		2
98	188-094	BRUSH W/TERMINAL		2
100	2-600-134	BRUSH PLATE ASSEMBLY	*52"*	1
	2-600-149	BRUSH PLATE ASSEMBLY 4.0	*62"*	1
102	975-041	SPRING - TORSION		2
104	701-043	O-RING		2
106	701-009	O-RING *THRU-BOLT*		2
108	830-027	SCREW - SELF-THREAD 10-32X2.25		2
110	830-094	THRU BOLT 12-24 X10.31		2
112	990-051	WASHER - STEEL THRUST		1
114	990-052	WASHER - NYLATRON		1
116	973-025	SPACER - BRUSHPLATE		2
118	992-010	WASHER - BELLEVILLE		2
120	990-045	SPACER - THRUST		1
122	640-018	LEADWIRE BLK 10 AWG 62 1/2 XLP	*52"*	1
	640-021	LEADWIRE BLK 10 AWG 69.5 XLP	*62"*	1
124	640-123	LEADWIRE RED 10 AWG 64 XLP	*52"*	1
	640-126	LEADWIRE RED 10AWG 71" XLP	*62"*	1
126	2331160	PROP-WW2 (4") w/ADP.RING		1
128	2262658	PIN-DRIVE 1" X 3/16" S/S		1
130	2091701	WASHER-PROP (LARGE) MAX101		1
132	2093101	NUT-PROP,NYLOC,LG,MX101 3/8 SS		1
134	2002014	TUBE (COMPOSITE) 52" WHITE	*52"*	1
	2002015	TUBE (COMPOSITE) 62" WHITE	*62"*	1
▲	✖	RIVET-.25"		6
▲	2260730	CONNECTOR 1/4 MALE TAB QD		2
▲	230-037	CABLE CLAMP		1

▲ *Not shown on Parts Diagram.*

✖ *This part is included in an assembly and cannot be ordered individually.*

©2021 Johnson Outdoors Marine Electronics, Inc.

RIPTIDE MAXXUM 80 BOWGUARD

Bowguard Parts Diagram

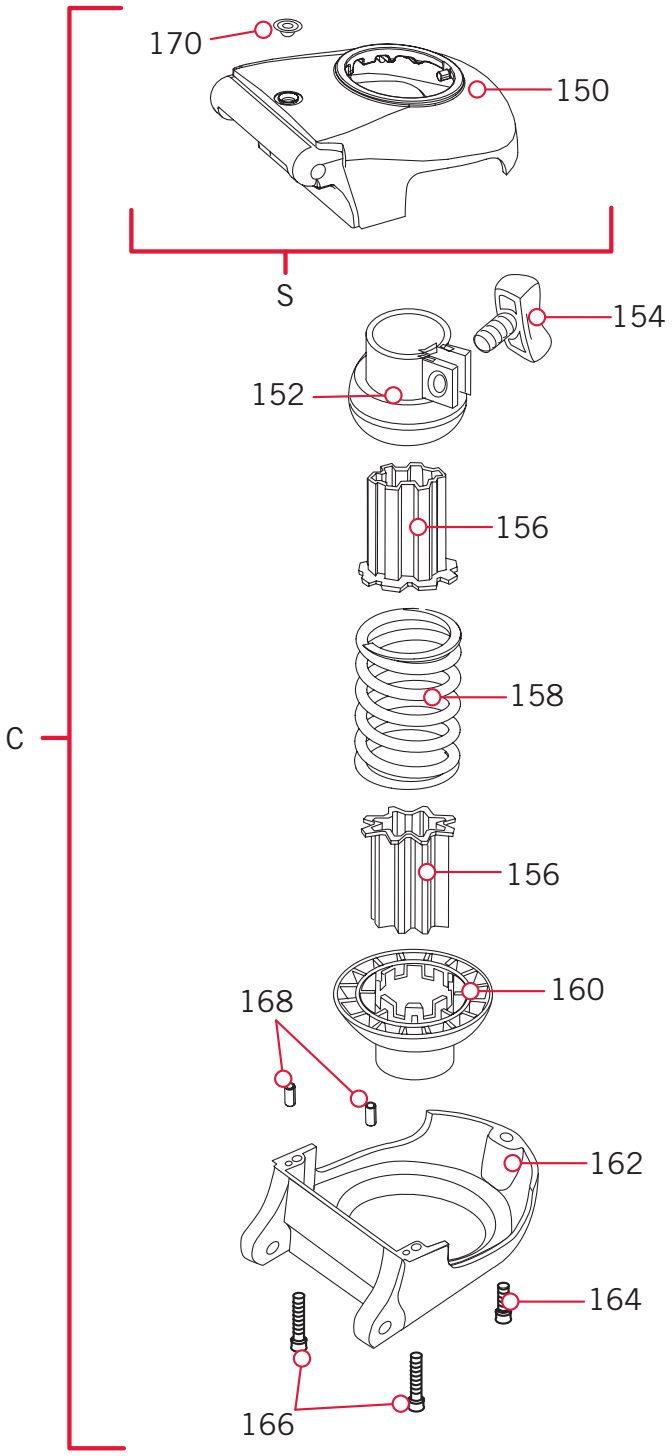

©2021 Johnson Outdoors Marine Electronics, Inc.

Bowguard Head Parts List

Assembly	Part #	Description	Quantity
C	2991764	BOWGUARD ASSY,SW,HC NON-3X	1
S	2772318	BRACKET BASE-TOP/EYELET SW	1
Item	**Part #**	**Description**	**Quantity**
150	2991779	BRACKET BASE TOP ASSY SW	1
152	2261525	SPRING-SLEEVE UPPER	1
154	2011366	SCREW-COLLAR/NEW KNOB(SS)	1
156	2264702	INSERT-TUBE BOWMNT	2
158	2262705	SPRING, BOWGUARD, S/S	1
160	2261535	SPRING SLEEVE, LOWER	1
162	2991777	BRACKET BTTM/BEARING SW ASY	1
164	2263422	SCREW-5/16-18 X 1" SHCS SS	1
166	2263424	SCREW-5/16-18 X 2.5" SHCS SS	2
168	2262632	PIN-SPRING 1/4" X 5/8" SS	2
170	2262315	EYELET-ROPE,STAINLESS STEEL	1

▲ *Not shown on Parts Diagram.*

✖ *This part is included in an assembly and cannot be ordered individually.*

©2021 Johnson Outdoors Marine Electronics, Inc.

RIPTIDE MAXXUM 80 MOUNT

Mount Parts Diagram

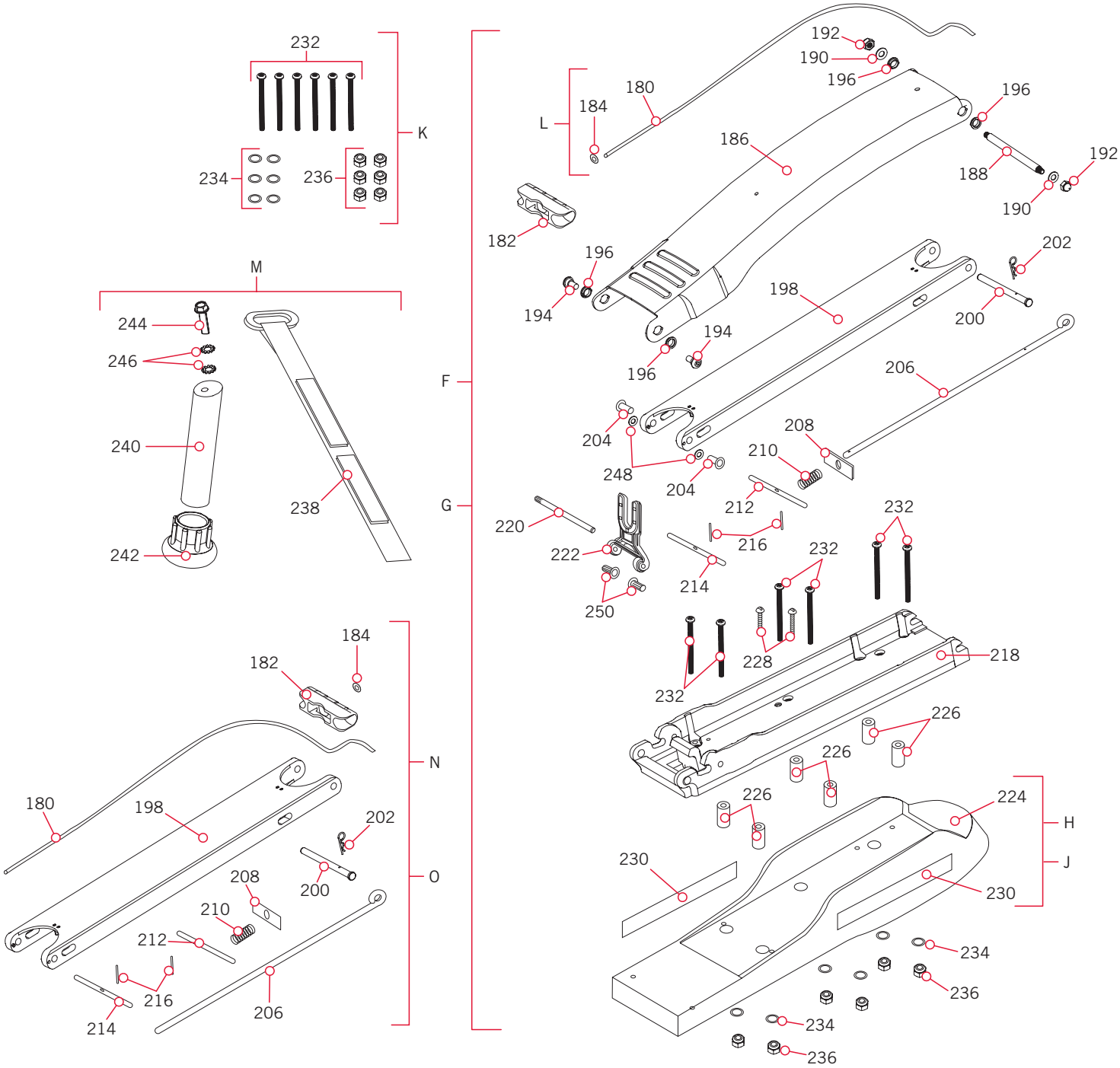

©2021 Johnson Outdoors Marine Electronics, Inc.

Mount Parts List

Assembly	Part #	Description	Notes	Quantity
F	2991660	MNT ASM MAXXUM SW STD 52"	*52"*	1
G	2991661	MNT ASM MAXXUM SW LONG 62"	*62"*	1
H	2999280	MTR REST ASM MAXXUM SW STD	*52"*	1
J	2999281	MTR REST ASM MAXXUM SW LNG	*62"*	1
K	2994830	BAG ASSY-MAXXUM	*52"* *62"*	1
L	2994886	BAG ASSY, PULL GRIP/WASHER	*52"* *62"*	1
M	2994841	BAG ASSY,STABILIZER/STRAP	*62"*	1
N	2774322	ARM-LOWER ASY,STD,SW,WHT,SERV.	*52"*	1
O	2774321	ARM-LOWER ASSY,LG,SW,WHT,SERV.	*62"*	1
Item	**Part #**	**Description**	**Notes**	**Quantity**
180	2251601	ROPE (44.5"), MAXXUM MNT		1
182	2150400	PULL-GRIP		1
184	2151700	WASHER-EYE SHAFT(.562 OD) SS		1
186	2264244	ARM-UPPER STD.SW,TX,WHT,ALUM.	*52"*	1
	2264249	ARM-UPPER LNG,SW,WHT,ALUM	*62"*	1
188	2262604	PIN-BWGRD,UPPER,THREADED,SS		1
190	2261722	WASHER-FLAT 5/16 S/S		2
192	2223100	NUT-5/16-18 NYLOCK S/S		2
194	2263500	BOLT, SHOULDER (MAXXUM)		2
196	2293501	BUSHING, STAINLESS STEEL		4
198	2994351	ARM-LOWER ASSY,STD,SW	*52"*	1
	2994356	ARM-LOWER ASSY,LNG,SW	*62"*	1
200	2262622	PIN-CLEVIS,SS,MAXXUM BWGRD		1
202	2263011	E-RING 3/8 DIA. SHAFT*		1
204	2267318	BUSHING,FLANGE,5/16 #5L7-F-642		2
206	2153603	EYE SHAFT-2LOCKBAR STD SS	*52"*	1
	2153605	EYE SHAFT-2LOCKBAR LONG SS	*62"*	1
208	2262703	SPRING STOP MAXXUM		1
210	2152701	SPRING-(LOCKBAR) SS		1
212	2233621	LOCK BAR (300 SERIES SS)		1
214	2233623	LOCK BAR, REAR, 300 SERIES SS		1
216	2152612	SPRING-PIN (LOCKBAR) 18-8 SS		2
218	2993983	BWPLT/INSRT ASY,STD,SW-WHT	*52"*	1
	2993982	BWPLT/INSRT ASY,LNG,SW-WHT	*62"*	1
220	2260505	PIN-HINGE(HEADLESS) S/S		1
222	2293811	YOKE,MAX MNT-POLYPROPYLENE		1

▲ *Not shown on Parts Diagram.*

✖ *This part is included in an assembly and cannot be ordered individually.*

©2021 Johnson Outdoors Marine Electronics, Inc.

PARTS DIAGRAM & PARTS LIST

Item	Part #	Description	Notes	Quantity
224	2263917	MOTOR REST STD RIPTIDE WHT	*52"*	1
	2263919	MOTOR REST LNG RIPTIDE WHT	*62"*	1
226	2261505	SPACER, MOTOR REST		6
228	2263434	SCREW-#8-18 X 1" PPH S/S		2
230	2265708	DECAL, MOTOR REST RT MAXXUM SW		2
232	2263431	SCREW-1/4-20 X 3.5 PPH		6
234	2261713	WASHER-1/4 FLAT 18-8 SS		6
236	2263103	NUT-1/4-20 NYLOCK SS		6
238	2263804	STRAP-HOLD DWN,30.5",VLCR		1
240	2268400	SHAFT-SUPPORT, MAXXUM	*62"*	1
242	2268401	BUMPER-SHAFT, MAXXUM	*62"*	1
244	2263464	SCREW-1/4-10 X 1 HH TYPE A SS	*62"*	1
246	2011720	LOCKWASHER-PROP (SMALL)	*62"*	2
248	2261708	WASHER-3/8"X1/2"X.010 (S/S)	*62"*	2
250	2261540	INSERT-THREADED,BOWPLT,MAX		2
▲	2285801	HANG TAG, HOOK AND LOOP STRAP		1
▲	2006819	LABEL-CARTON "CAUTION HEAVY"		1
▲	2264990	INSTRUCTIONS STABILIZER/STRAP	*62"*	1

▲ *Not shown on Parts Diagram.*

✖ *This part is included in an assembly and cannot be ordered individually.*

©2021 Johnson Outdoors Marine Electronics, Inc.