PARTS DIAGRAM & PARTS LIST

MAXXUM 70 - 70 LBS THRUST - 24 VOLT - 42” SHAFT

The parts diagram and parts list provides Minn Kota® WEEE compliance disassembly instructions. For more information about where you should dispose of your waste equipment for recycling and recovery and/or your European Union member state requirements, please contact your dealer or distributor from which your product was purchased. Tools required, but not limited to: flat head screwdriver, Phillips screwdriver, socket set, pliers, wire cutters.

MAXXUM 70 FOOT PEDAL & CONTROL HEAD

Foot Pedal & Control Head Parts Diagram

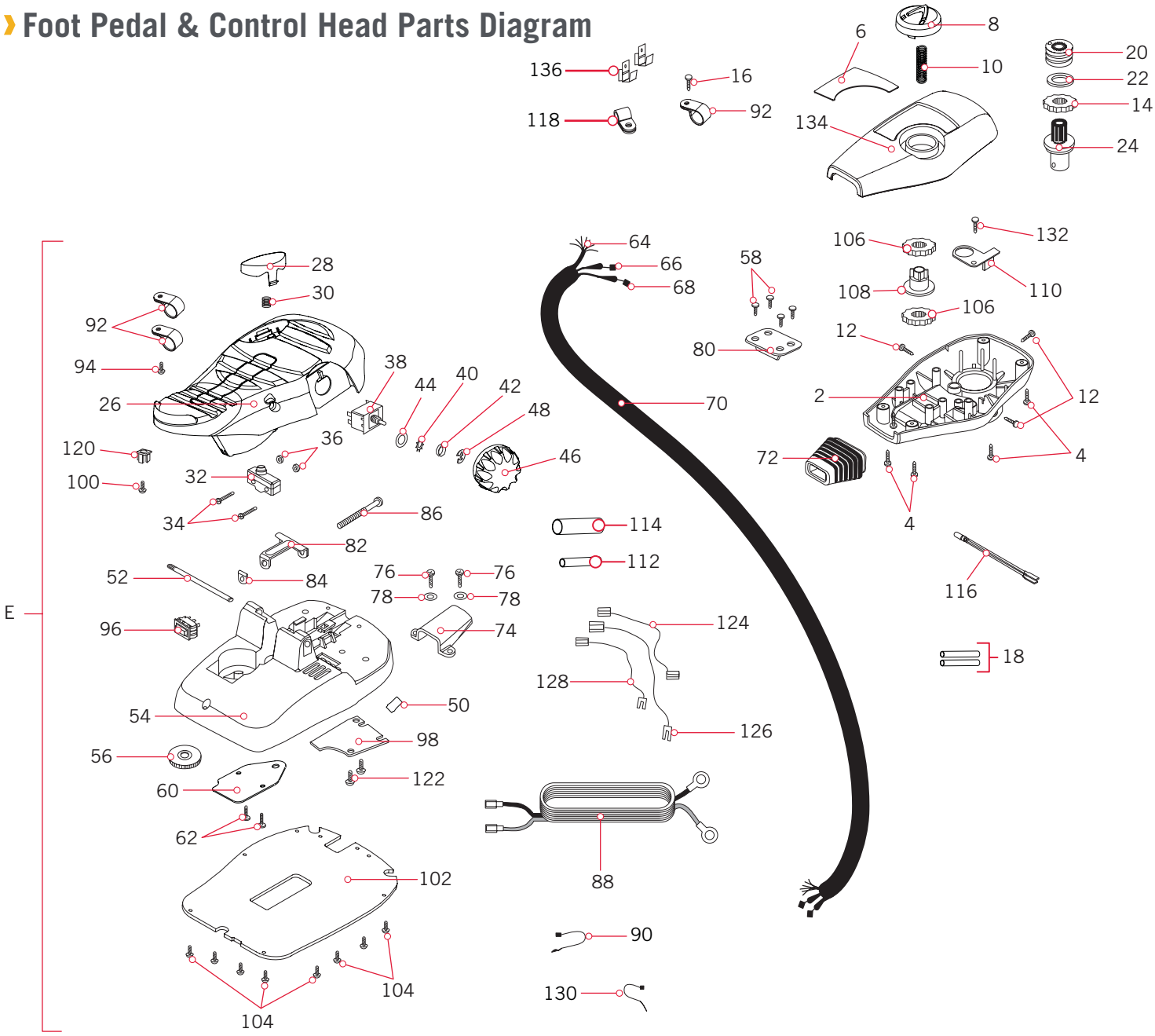

Part #2274958 ECN 40109 Rev N 03/20

©2020 Johnson Outdoors Marine Electronics, Inc.

Foot Pedal & Control Head Parts List

Assembly	Part #	Description	Notes	Quantity
E	2992120	FOOT PEDAL ASM, 5-SPD, 24V		1
Item	**Part #**	**Description**	**Notes**	**Quantity**
2	2282500	CONTROL BOX , PLASTIC		1
4	2372100	SCREW-#8-18 X 5/8 THD* (SS	NOT PART OF ASSEMBLY E	4
6	2265716	DECAL-COVER, MAX70/SC/FC		1
8	2990140	INDICATOR ASSY		1
10	2282730	SPRING-INDICATOR		1
12	2053414	SCREW-#8-32 X 1/2” TRI-LOBE	NOT PART OF ASSEMBLY E	3
14	2267800	GEAR-INDICATOR		1
16	2372100	SCREW-8-18 X 5/8” SS		1
18	2335400	SHRINK TUBE-1/2 OD X 2"		2
20	2232360	PULLEY-CABLE DRUM		1
22	2261730	WASHER-NYLON A/T CON B		1
24	2996247	TOP BEARING RACE/PINION DRIVE		1
26	2994497	FOOT PEDAL w/PLUG		1
28	2283700	PUSH BUTTON W/MAG CAVITY		1
30	2302732	SPRING-LOWER PEDAL S/S		1
32	2264040	SWITCH-MOM., CAT# YA-7RB215T		1
34	2262114	SCREW-MOUNTING/SWITCH		2
36	2233100	NUT-SWITCH MOUNT		2
38	2264026	SWITCH-5 SPEED (ALL TERAIN)		1
40	2261701	LOCKWASHER-STAR (ZP STEEL)		1
42	2263105	NUT-HEX 3/8-24, JAM ZP		1
44	2261715	SPACER-SWITCH 5 SP MODELS ZP		1
46	2280110	KNOB-SPEED CTRL,5 SPD		1
48	2263000	E-RING TRU-ARC#5133-43		1
50	2266413	TENSION SCREW PLATE FTPEDAL		1
52	2260511	PIN-PIVOT A/T FT PDL		1
54	2994556	ASSEMBLY, FT PEDAL BASE/PIN		1
56	2262301	PULLEY (FOOT PEDAL)		1
58	2223430	SCREW-#8x3/4 PPH,TYPE 25,SS		4
60	2266401	COVER-PULLEY (STAMPING)		1
62	2301310	SCREW-#8-18 X 1/2 (SS)*		2
64	2261208	WIRE HARNESS, A/T FT. PEDAL		1
66	2267505	CABLE ASSY-RIGHT (5')		1
68	2267515	CABLE ASSY-LEFT (5')		1

▲ *Not shown on Parts Diagram.*

✖ *This part is included in an assembly and cannot be ordered individually.*

©2020 Johnson Outdoors Marine Electronics, Inc.

PARTS DIAGRAM & PARTS LIST

Item	Part #	Description	Notes	Quantity
70	2265430	CABLE JACKET (5')		1
72	2265110	BOOT-CONTROL BOX		1
74	2265115	BOOT-FOOT PEDAL BASE		1
76	2372100	SCREW-#8-18 X 5/8 THD* (SS		2
78	2261714	WASHER-MAXXUM FT PDL 18/8 SS		2
80	2261901	BRACKET-CONDUIT AT/MAX		1
82	2263210	BRACKET-CONDUIT ADJUSTMEN		1
84	2263140	KEEPER-NYLOCK		1
86	2263466	SCREW-1/4-20 X 2" PPH SS/REI		1
88	2261235	LEADWIRE-BATTERY A/T 5-SPD		1
90	2256300	TIE WRAP-5.5" BLACK		1
92	2263201	CLAMP WIRE HARNESS MICRO		3
94	2332103	SCREW-#6-20 X 3/8 THD*(SS)		1
96	2254031	SWITCH-MOM/OFF/COM		1
98	2266412	SWITCH PLATE, FT PEDAL		1
100	2332103	SCREW-#6-20 X 3/8 THD*(SS)		1
102	2266414	BOTTOM PLATE MAX FOOT PEDAL		1
104	9953104	SCREW-#8 X 1/2" PPH S/S		8
106	2267800	GEAR-INDICATOR		2
108	2262221	INDICATOR-DRIVE (YELLOW)		1
110	2261905	BRACKET/INDICATOR		1
112	2375400	SHRINK TUBE-1/4OD X 1-3/4		1
114	2355410	SHRINK TUBE-3/8 DIA. ID X 2"		1
116	2264019	LIGHT/INDICATOR MAX65/SC		1
118	2052511	CABLE CLAMP,1/4" VANTAGE		1
120	2260730	CONNECTOR 1/4 MALE TAB QD		1
122	2332103	SCREW-#6-20 X 3/8 THD*(SS)		2
124	2260301	CONNECTING WIRE (SWITCH)		1
126	2260312	WIRE,BLK W/WHT STRP 19 1/4"		1
128	2260322	WIRE,BLK W/BLUE STRP-12"		1
130	9950433	TIE WRAP-4" BLACK		1
132	9953104	SCREW-#8 X 1/2" PPH S/S		1
134	2280202	CONTROL BOX COVER, FTX,MAX/FC		1
136	2020713	TERMINAL-ADAPTOR, MAX50/S		2
▲	2267153	MANUAL-MAXXUM / FC		1
▲	2274958	PARTS LIST MAX70/SC/FC-42"		1
▲	2015800	HANG TAG "CAUTION..TILT HINGE"		1
▲	2006809	PRODUCT LABELS,"CAUTION HEAVY"		1

▲ *Not shown on Parts Diagram.*

✖ *This part is included in an assembly and cannot be ordered individually.*

©2020 Johnson Outdoors Marine Electronics, Inc.

MAXXUM 70 MOTOR

Motor Parts Diagram

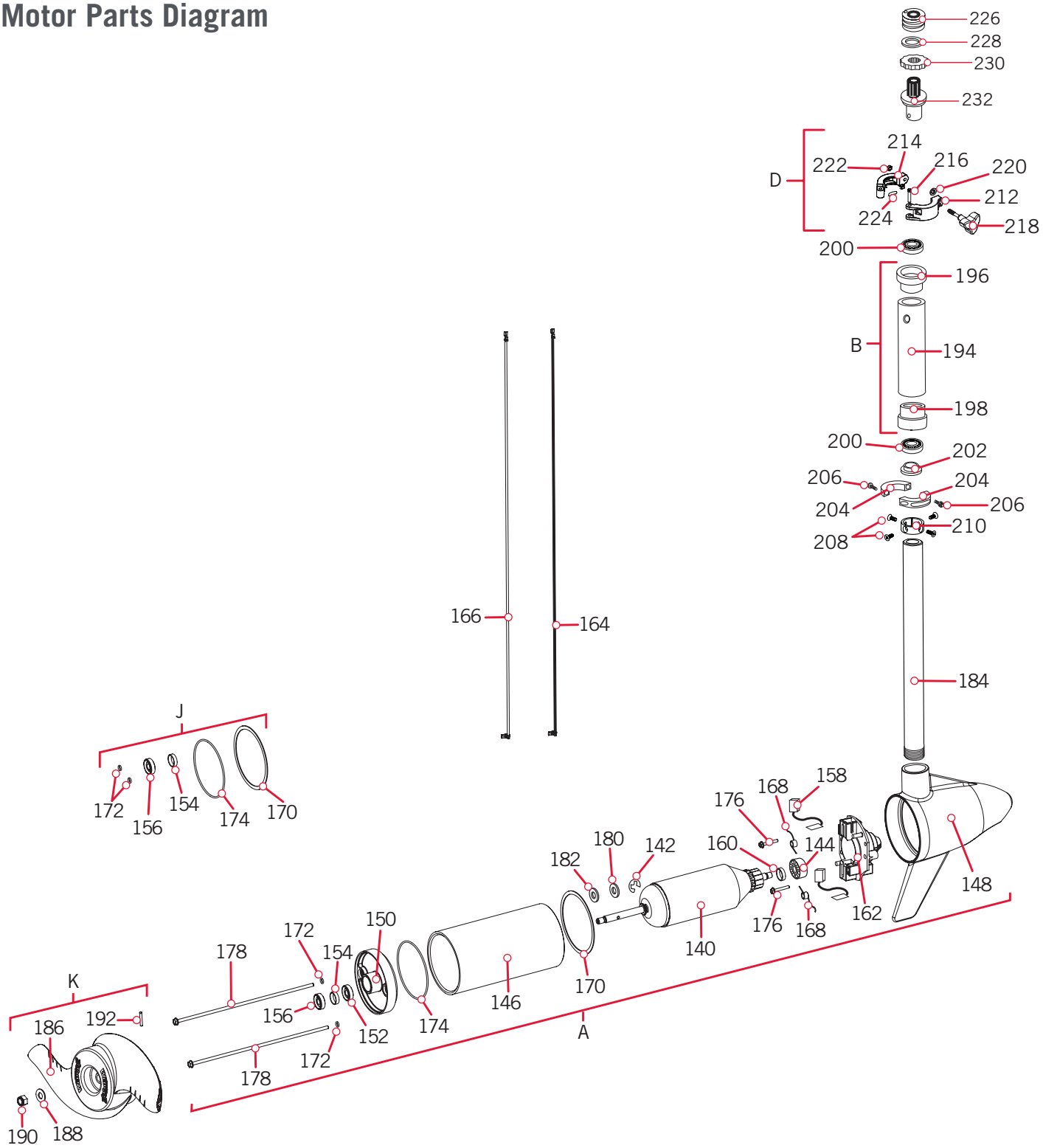

©2020 Johnson Outdoors Marine Electronics, Inc.

Motor Parts List

Assembly	Part #	Description	Quantity
A	2096063	MTR ASY 24V 3.62 SC 70#FW	1
B	2992012	TUBE W/BEARING RACE ASSY	1
D	2991550	CLAMP COLLAR ASSEMBLY	1
J	2888460	SEAL & O-RING KIT TURBO PRO	1
K	1378131	PROP KIT	1
Item	**Part #**	**Description**	**Quantity**
140	2-100-128	ARMATURE ASM 24V 3.62",70	1
142	788-015	RETAINING RING	1
144	140-010	BEARING - BALL	1
146	2-200-005	CTR HSG ASY 3.6 FW-MAGNET	1
148	2-300-042M	BRUSH END ASY 24V 3.625 SPCOIL	1
150	2-400-101A	PLAIN END HSG ASY 3.625	1
152	144-049	BEARING - FLANGE	1
154	880-003	SEAL	1
156	880-006	SEAL WITH SHIELD	1
158	188-038	BRUSH ASSEMBLY, 3.625", 70#	2
160	725-035	PAPER TUBE - SEAL BORE	1
162	738-038	BRUSH PLATE, 3.625", 70#	1
164	640-005	LEADWIRE BLK 10 AWG 57 GPT	1
166	640-114	LEADWIRE RED 10 AWG 59 GPT	1
168	975-042	SPRING-TORSION, 70# LOWER UNIT	2
170	337-036	GASKET	1
172	701-008	O-RING *THRU-BOLT*	2
174	701-081	O-RING	1
176	830-007	SCREW, # 8-32	2
178	830-008	THRU BOLT 10-32 x 9.205	2
180	990-067	WASHER - STEEL THRUST	1
182	990-070	WASHER - NYLATRON	1
184	2032003	TUBE COMP 42" (44.625")	1
186	2091160	PROP-WW2 (3 5/8") REAMED	1
188	2151726	WASHER-5/16 STD (S/S)	1
190	2053101	NUT-PROP,NYLOC (MED) 5/16 SS	1
192	2092600	PIN-DRIVE 1.06" LG (SS)	1
194	2272069	TUBE OUTER-21" 4 HOLES	1
196	2266260	BEARING RACE	1
198	2266220	BEARING RACE- STEEL	1

▲ *Not shown on Parts Diagram.*

✖ *This part is included in an assembly and cannot be ordered individually.*

©2020 Johnson Outdoors Marine Electronics, Inc.

Item	Part #	Description	Quantity
▲	810-001	RIVET-.25"	4
200	2266000	BEARING BALL-STEEL	2
202	2266115	BEARING CONE	1
204	2261622	COLLAR HALF,ALUM (2 PER)	2
206	2263453	SCREW-1/4-20 X 1" SHCS S/S	2
208	2263457	SCREW-#8-32 X 3/8 PFH MACH	4
210	2071560	COLLAR-TUBE (4 HOLES)	1
212	2071550	COLLAR-CLAMP "A" SIDE	1
214	2071555	COLLAR-CLAMP "B" SIDE	1
216	2072621	PIN, KNURLED	1
218	2281505	KNOB-SOFT GRIP, FW	1
220	2071718	WASHER #10 NYLON RETAINING	1
222	2073102	NUT-HEX 1/4-28 SS	1
224	2075120	PAD,URETHANE,DEPTH COLLAR	1
226	2232360	PULLEY-CABLE DRUM	1
228	2261730	WASHER-NYLON A/T CON B	1
230	2267800	GEAR-INDICATOR	1
232	2996247	TOP BEARING RACE/PINION DRIVE	1

▲ *Not shown on Parts Diagram.*

✖ *This part is included in an assembly and cannot be ordered individually.*

©2020 Johnson Outdoors Marine Electronics, Inc.

MAXXUM 70 BOWGUARD

Bowguard Parts Diagram

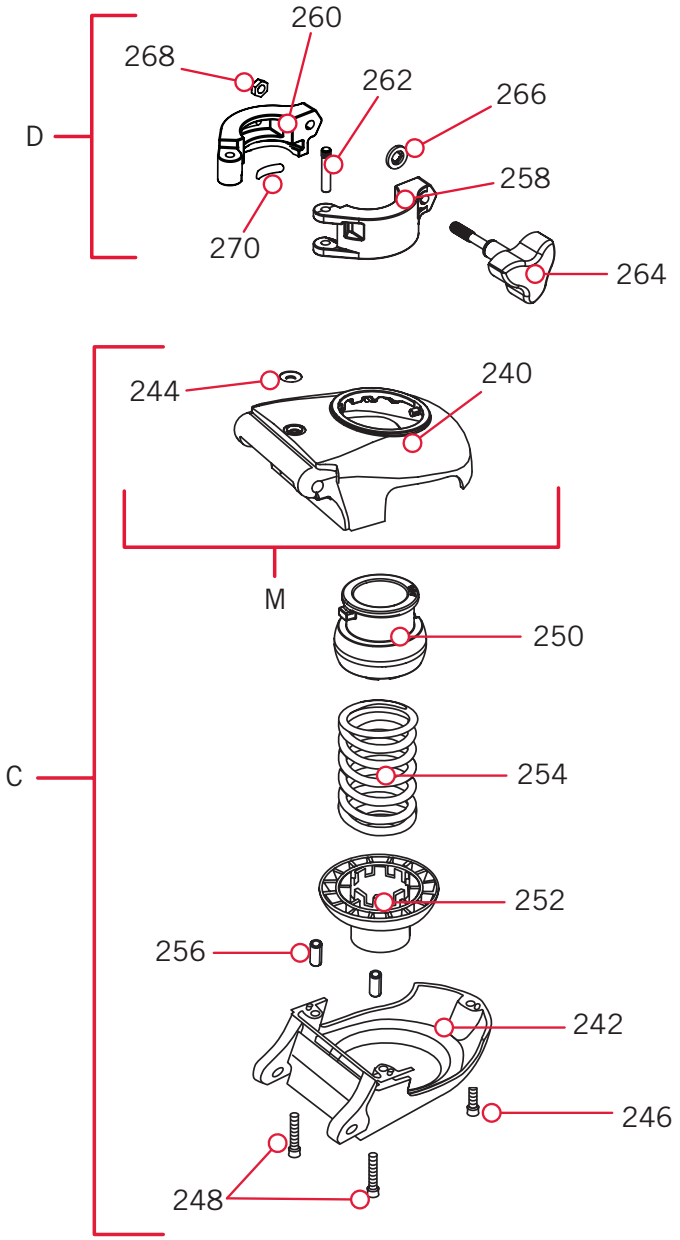

©2020 Johnson Outdoors Marine Electronics, Inc.

Bowguard Parts List

Assembly	Part #	Description	Quantity
C	2991762	BOWGUARD ASY-FW,FC; HC W/3X	1
D	2991550	CLAMP COLLAR ASSEMBLY	1
M	2772319	BRACKET BASE-TOP/EYELET FW	1
Item	**Part #**	**Description**	**Quantity**
240	2261943	BRACKET BASE TOP FW	1
242	2991776	BRACKET BTTM/BEARING FW ASY	1
244	2262315	EYELET-ROPE,STAINLESS STEEL	1
246	2263423	SCREW-5/16-18 X 1" SHCS ZP	1
248	2263425	SCREW-5/16-18 X 2.5" SHCS ZP	2
250	2071541	SPRING-SLEEVE UPPER, MR C MAT'L	1
252	2071535	SPRING SLEEVE, LOWER	1
254	2262712	SPRING, BOWGUARD, FC PAINTED	1
256	2262632	PIN-SPRING 1/4" X 5/8" SS	2
258	2071550	COLLAR-CLAMP "A" SIDE	1
260	2071555	COLLAR-CLAMP "B" SIDE	1
262	2072621	PIN, KNURLED	1
264	2281505	KNOB-SOFT GRIP, FW	1
266	2071718	WASHER #10 NYLON RETAINING	1
268	2073102	NUT-HEX 1/4-28 SS	1
270	2075120	PAD,URETHANE,DEPTH COLLAR	1

▲ *Not shown on Parts Diagram.*

✖ *This part is included in an assembly and cannot be ordered individually.*

©2020 Johnson Outdoors Marine Electronics, Inc.

MAXXUM 70 MOUNT

Mount Parts Diagram

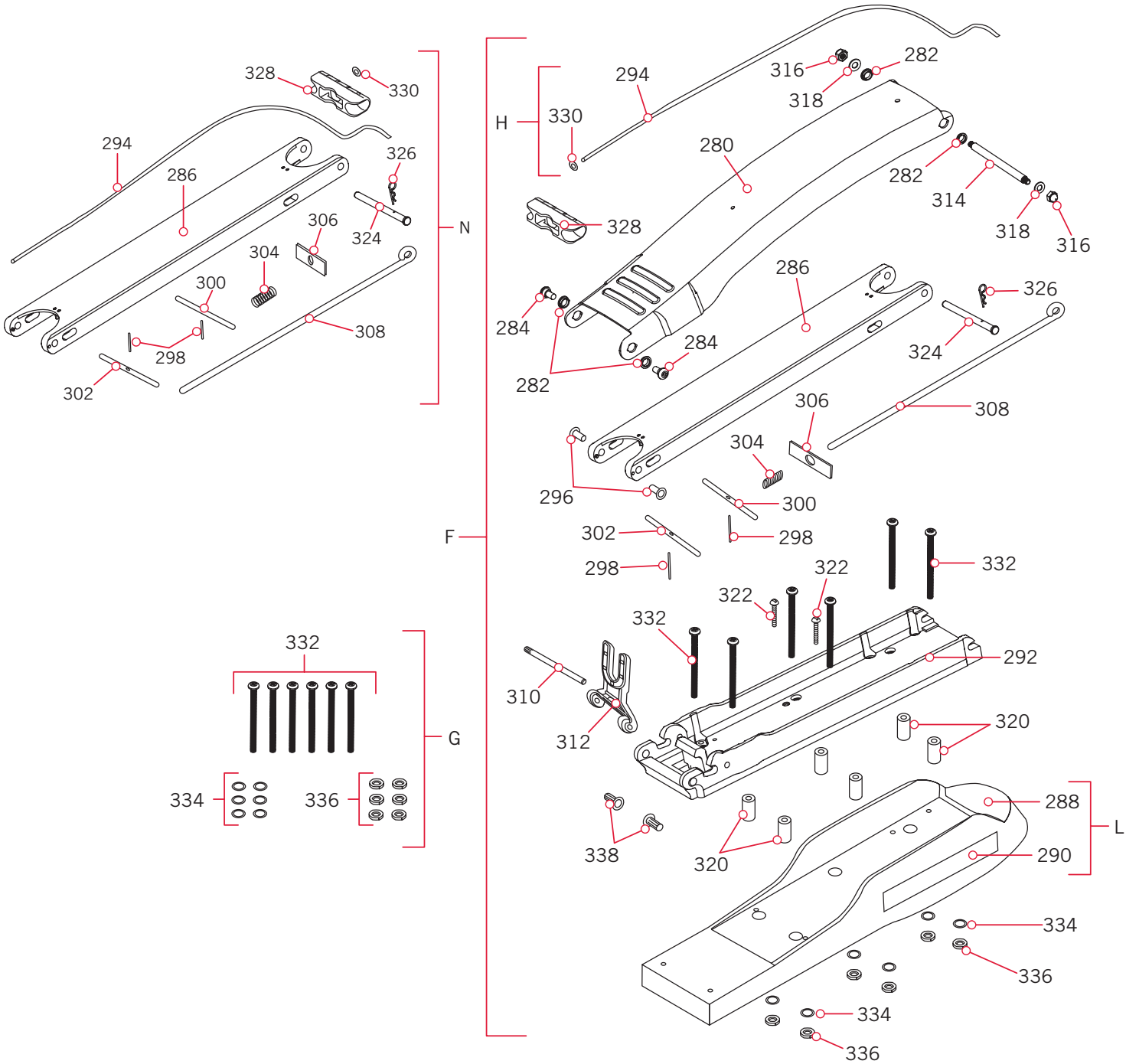

©2020 Johnson Outdoors Marine Electronics, Inc.

Mount Parts List

Assembly	Part #	Description	Quantity
F	2991659	MNT ASM MAXXUM FW STD	1
G	2994830	BAG ASSY-MAXXUM	1
H	2881601	ROPE W/WASHER(40")MX MT	1
L	2999277	MTR REST ASM MAXXUM FW STD	1
N	2774315	ARM-LOWER ASSY FW STD.	1
Item	**Part #**	**Description**	**Quantity**
280	2264241	ARM-UPPER STD. FW, TX	1
282	2293501	BUSHING, STAINLESS STEEL	4
284	2263500	BOLT, SHOULDER (MAXXUM)	2
286	2994307	ARM-LOWER ASSY,STD,FW,EXT	1
288	2263916	MOTOR REST STD MAXXUM BLK	1
290	2265707	DECAL, MOTOR REST MAXXUM FW	2
292	2773987	BOWPLATE/INS ASY,STD,FW-TX	1
294	2251601	ROPE (44.5"), MAXXUM MNT	1
296	2267318	BUSHING,FLANGE,5/16 #5L7-F-642	2
298	2152612	SPRING-PIN (LOCKBAR) 18-8 SS	2
300	2233620	LOCK BAR-(BOW MNT) ZP CRS	1
302	2233622	LOCK BAR, REAR - ZP CRS	1
304	2152700	SPRING-(LOCKBAR) CAD.PLTD	1
306	2262703	SPRING STOP MAXXUM	1
308	2153602	EYE SHAFT-2LOCKBAR STD-PLTD	1
310	2260506	HINGE-PIN (HEADLESS)ZINC	1
312	2293811	YOKE,MAX MNT-POLYPROPYLENE	1
314	2262605	PIN-BWGRD,UPPER,THREADED,ZP	1
316	2223100	NUT-5/16-18 NYLOCK S/S	2
318	9908236	WASHER-1/4 FLAT (ZINC)	2
320	2261505	SPACER, MOTOR REST	6
322	2263434	SCREW-#8-18 X 1" PPH S/S	2
324	2262607	PIN-CLEVIS,ZP,MAX BWGRD	1
326	2260805	CLIP-HAIR SPRING,ZP,MAX BG	1
328	2150400	PULL-GRIP	1
330	2151700	WASHER-EYE SHAFT(.562 OD) SS	1
332	2263431	SCREW-1/4-20 X 3.5 PPH	6
334	2261713	WASHER-1/4 FLAT 18-8 SS	6
336	2263103	NUT-1/4-20 NYLOCK SS	6
338	2261540	INSERT-THREADED,BOWPLT,MAX	2

▲ *Not shown on Parts Diagram.*

✖ *This part is included in an assembly and cannot be ordered individually.*

©2020 Johnson Outdoors Marine Electronics, Inc.