DAIWA

SPINNING REEL

Please order by parts number, not key number
Veuillez indiquer le numéro de la pièce (Non "Key" No.)

SABAYJ4000-JDM

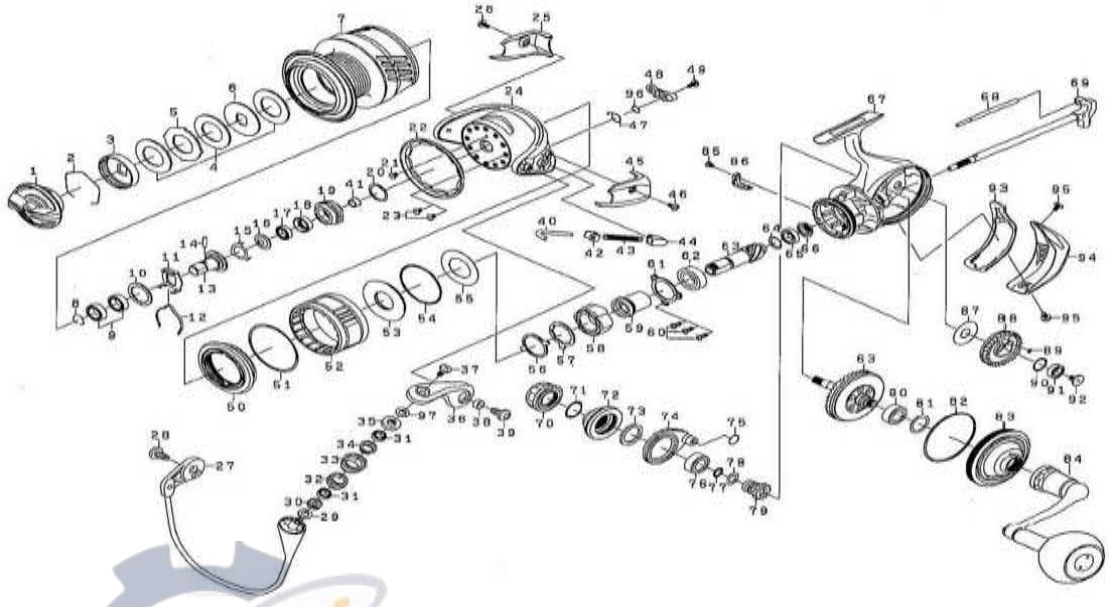

Key No.	Part No.	Part Name
1	J45-8401	DRAG KNOB
2	F71-0001	DRAG WASHER RET
3	F89-5305	DRAG KNOB CLICK PLATE
4	J39-8801	ATD-DRAG WASHER KIT
5	F64-4702	KEY WASHER
6	G16-5903	EARED WASHER
7	J45-7101	SPOOL ASSY / SABAYJ4000
8	G52-5101	BEARING RET
9	G43-1004	BALL BEARING
10	G90-3902	SPOOL WASHER
11	G69-4001	CLICK LEAF SPRING HOLDER
12	H73-7101	LEAF SPRING
13	J30-2801	SPOOL METAL
14	F64-3601	PIN
15	G52-4801	BEARING RET
16	H62-1501	PACKING
17	G21-2503	BALL BEARING
18	J30-2501	COLLAR
19	J30-2401	ROTOR NUT
20	G64-5603	WASHER
21	H02-2701	LINE GUARD SCREW
22	J30-2301	LINE GUARD RING
23	H02-2701	LINE GUARD SCREW
24	J30-2101	ROTOR
25	J30-2201	SIDE COVER (A)
26	H43-1301	SCREW C
27	J45-5201	BAIL ASSY / SABAYJ3500-4000
28	H43-1201	SCREW
29	B41-1703	WASHER (0.1MM)
30	H74-3401	MAGNET COLLAR
31	G68-6903	BALL BEARING
32	H74-3701	COLLAR D
33	H74-3801	LINE ROLLER
34	H74-3901	COLLAR C
35	H74-4001	MAGNET COLLAR
36	H96-0121	ARM LEVER
37	H74-4201	SCREW E
38	H96-2401	COLLAR (A)
39	H43-1201	SCREW D
40	H64-0601	BAIL SPRING SHAFT
41	J40-1401	COLLAR
42	H57-6101	BAIL SPRING PLATE
43	H64-0701	BAIL SPRING
44	J08-9401	BAIL SPRING HOLDER
45	H99-4601	COVER (A)
46	H43-1301	SCREW C
47	H41-3601	BAIL TRIP LEVER SPRING
48	H99-4401	BAIL TRIP LEVER
49	H41-7701	SCREW B

Key No.	Part No.	Part Name
50	J30-1801	MAGSEAL COVER NUT
51	H17-6501	O RING
52	J30-1702	MAGSEALED CAP
53	H61-9301	MAGNET
54	H45-2801	O RING
55	H61-9201	WASHER
56	H69-0201	CLUTCH CAM RETAINER
57	J54-1901	CLUTCH CAM PLATE
58	G31-4501	ROLLER CLUTCH
59	H78-2302	SPACING SLEEVE
60	E13-4508	SCREW
61	G52-2901	BEARING RET
62	G52-2803	BALL BEARING
63	Z02-3235	PINION + DRIVE GEAR UNIT
64	G57-8501	WASHER
65	G52-2705	BALL BEARING
66	H61-8001	COLLAR
67	J45-4701	BODY / SABAYJ3500H-4000
68	H63-9301	STABILIZER BAR
69	J30-0601	MAIN SHAFT
70	J30-3301	HANDLE SCREW CAP
71	G16-2401	"O" RING
72	J45-5001	DRIVE BEARING COVER
73	J30-1301	COLLAR
74	J30-0303	BODY SET PLATE
75	J30-0401	O RING
76	J04-0001	BALL BEARING (MS)
77	J18-5701	O-RING
78	G80-0701	O-RING
79	J30-0501	OSCILATING GEAR PINION
80	J04-0001	BALL BEARING (MS)
81	G64-5601	WASHER
82	H50-2601	O RING
83	J45-5103	BODY COVER
84	J45-5501	HANDLE ASSEMBLY
85	H45-5407	SCREW
86	H90-6201	BAIL TRIP PLATE
87	G64-4203	WASHER
88	J30-4201	OSC GEAR
89	B85-3101	O RING
90	G52-2101	OSC GEAR WASHER
91	G46-7102	BALL BEARING
92	H27-2202	SCREW
93	J30-1901	PACKING
94	J30-2001	REAR COVER
95	H75-3302	SCREW
96	J33-9502	WASHER (THICKNESS 0.1)
97	J33-9502	WASHER (THICKNESS 0.1)

ReelSchematic