www.reelschematic.com

garcia ABU AUTO-SPIN 505

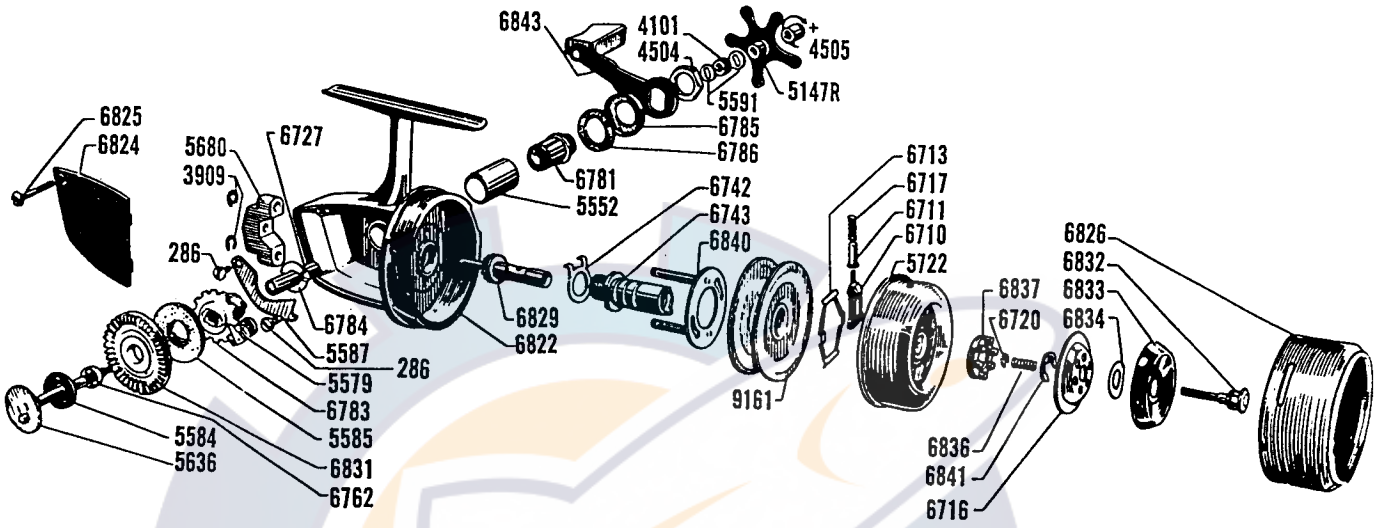

Prices subject to change without notice

Please specify both reel model and part numbers when ordering.

No.	Part Name	Price
286	Lock Arm Screw (each)	.10
3909	"C" Lock (each)	.10
4101	Brake Spring	.25
4504	Handle Bearing Lock Nut	.25
4505	Handle Lock Nut (left hand thread)	.25
5147R	Star Wheel (Red)	1.75
5552	Oilite Bushing	.50
5579	Anti Reverse Dog	.75
5584	Base Drag Washer	.10
5585	Drag Pressure Plate	1.00
5587	Ratchet Lock Arm	.25
5591	Brake Spring Washer (each)	.10
5636	Drive Shaft with Click Plate	1.60
5680	Oscillation Guide	.25
5722	Winding Cup	5.50
6710	Line Pick Up Ejector	.25
6711	Line Pick Up	.60
6713	Ejector Clamp	.15
6716	Cushion Plate	.60
6717	Line Pick Up Spring	.10
6720	"C" Lock	.10
6727	Drive Shaft Bushing	.25
6742	Pinion Bushing Lock	.10
6743	Pinion Gear Bushing	1.60
6762	Drive Gear Center Ring	.25
6781	Handle Bearing	1.00
6783	Anti Reverse Ratchet	1.00
6784	Synchro Slide	.15
6785	Dust Shield	.25
6786	Felt Oil Retainer	.10
6822	Housing	4.75
6824	Side Plate	.75
6825	Side Plate Screw	.15
6826	Bell Cover	3.25
6829	Pinion Gear	1.60
6831	Drive Gear with Click Spring	2.50
6832	Winding Cup Shaft	.65
6833	Line Release Button	.75
6834	Spring Washer	.10
6836	Winding Cup Shaft Spring	.10
6837	Release Button Bridge	.25
6840	Spool Mount	1.50
6841	"C" Lock	.10
6843	Handle	1.75
9161	(6753) Spool, (with container)	3.00
9228	Container	.60

PARTS AND SERVICE AVAILABLE AT THE FOLLOWING REGIONAL FACTORY REPAIR DEPOTS:

FACTORY SERVICE
RODS, REELS AND PARTS

THE GARCIA SERVICE DEPARTMENT
329 ALFRED AVENUE
TEANECK, NEW JERSEY 07666

THE CONOLON CORPORATION
1111 EAST McFADDEN STREET
SANTA ANA, CALIFORNIA 92705

SILICOTE SALES DIVISION
520 WEST 14th AVENUE
OSHKOSH, WISCONSIN 54902

J. K. CLARK COMPANY
ACO SPORTSMEN SERVICE
13501 VAN DYKE
DETROIT, MICHIGAN 48234

REEL SERVICE AND PARTS

NATE BUELL SERVICE CORPORATION
5013 N.E. 42nd STREET
PORTLAND, OREGON 97218

HARRY C. MILLER CO., INC.
257 PARK AVENUE SOUTH
NEW YORK, NEW YORK 10010

SHERMAN LOYD SALES COMPANY
4737 GREENVILLE AVENUE
DALLAS, TEXAS 75206